

EL-01

Arm Curl

SERVICE PARTS LIST

Upholstery color / Part No.

Upholstery	● Black	● Brown
Arm pad	**M012526**	**M012005**
Arm pad cover	**M013441**	**M012013**
Seat pad	**M012525**	**M012001**

Key parts / Part No.

Item	Part No.	Spec
Cable	**S010308**	2373L
Weight stack label	**M011960**	V1, 240LB
Weight stack label	**S010600**	V3, 240LB (2024/08~)

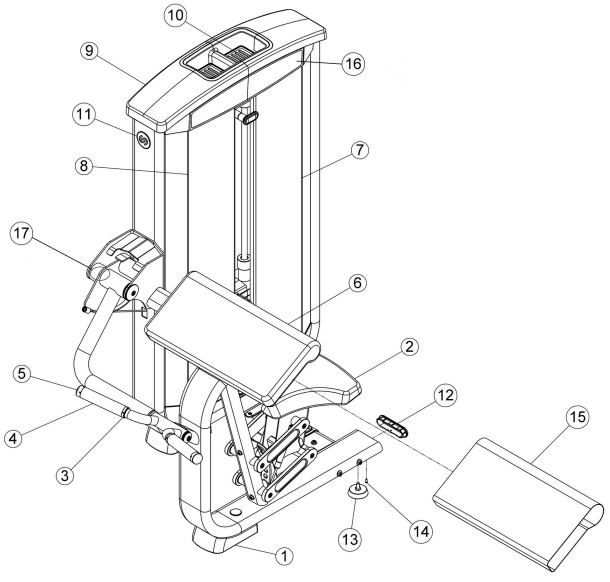

No.	Part No.	Description	Spec	Qty
1	M011995	Foot, tower	139.8W x 207.4L x 62.3H	2
2	M012525	Pad, seat ● **Black**	309W x 364L x 65H	1
2	M012001	Pad, seat ● **Brown**	309W x 364L x 65H	1
3	M012002	Fixed Bushing	Φ39.5xΦ32.5x11.1H	2
4	M012003	Grip, foam, handle	IDΦ31.5x4.0t x 165L	2
5	M012004	End cap	Φ39.5xΦ32.5x22.2H	2
6	M012526	Pad, arm ● **Black**	293W x 610L x 85H	1
6	M012005	Pad, arm ● **Brown**	293W x 610L x 85H	1
7	M012006	Shroud, tower front (R)		1
8	M012007	Shroud, tower front (L)		1
9	M012008	Tower, cap		1
10	M012009	Tray, tower cap - large		2
11	S007957	Assy, decal	OD65x0.5t	1
12	M012010	Cap, End, FLOV	Φ40xΦ137x25H (#10-32UNF)	1
13	M012011	Foot Plate	Φ70x43.5L	1
14	M012012	Screw	#10-32UNF x 1/2"L (12mm)	8
15	M013441	Cover, leather, arm ● **Black**		1
15	M012013	Cover, leather, arm ● **Brown**		1
16	M012205	BC placard		2
17	X001644	Assy, cable guide, cam		1

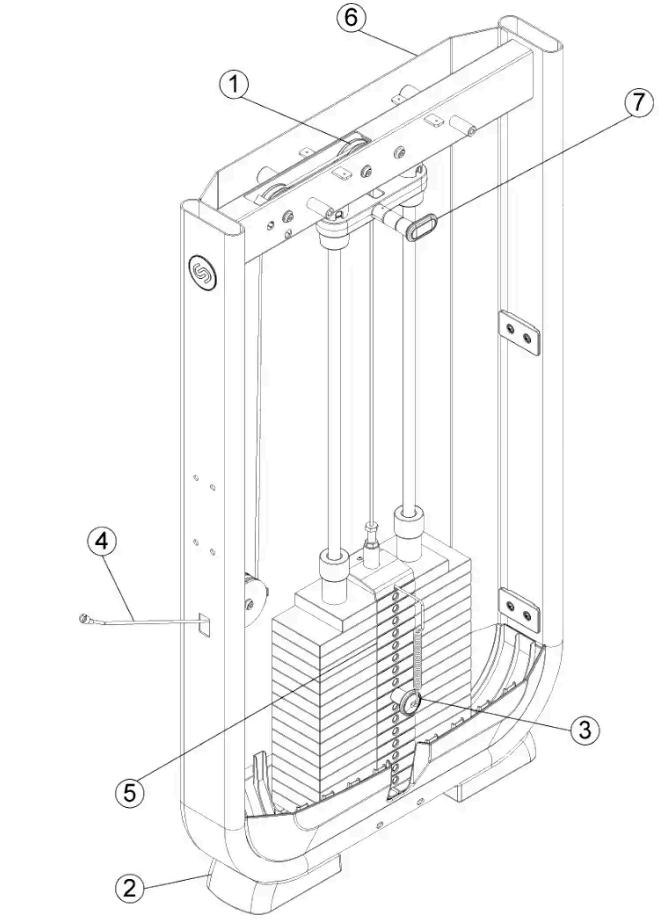

No.	Part No.	Description	Spec	Qty
1	M012014	Pulley	ODΦ89 x IDΦ3/8"	3
2	M011995	Foot, tower	139.8W x 207.4L x 62.3H	1
3	M011989	Pin, head plate		1
4	S010308	Cable, EL01	2373L	1
5	M011960	Label, weight stack 240lbs	V1, 240LB	1
5	S010600	Label, weight stack 240lbs	V3, 240LB (2024/08~)	1
6	M012016	Rear shroud		1
7	S010309	7.5lb INC. weight		1

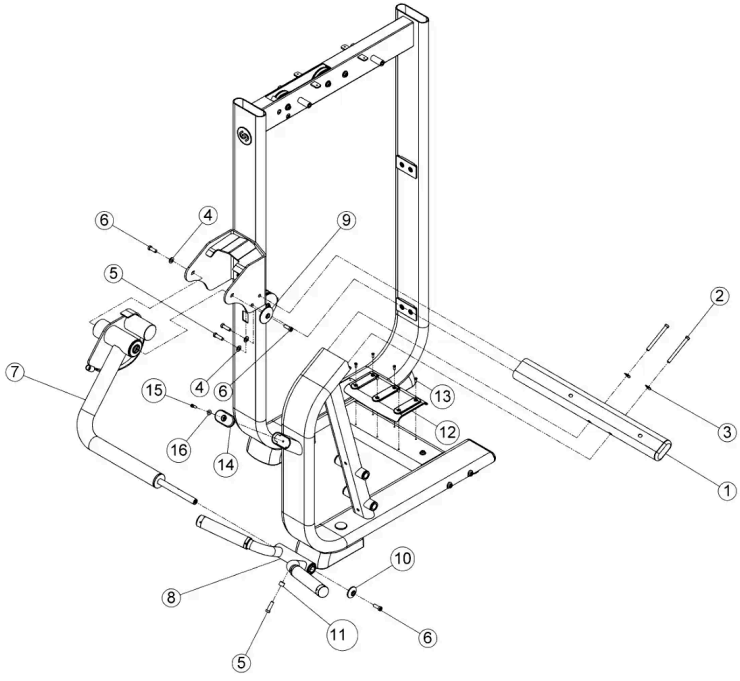

No.	Part No.	Description	Spec	Qty
1	S010310	BC pad support		1
2	M012017	Screw, socket head	3/8"-16UNC x 4"L (102mm)	2
3	M011981	Washer, curve	Φ22xΦ10x1.5t	2
4	M011985	Washer, flat	Φ20xΦ10.5x1.0t	3
5	M012018	Screw, socket head	3/8"-16UNC x 1-1/4"L (32mm)	3
6	M012235	Screw, socket head	3/8"-16UNC x 1"L (25mm)	3
7	S010311	BC pivot arm		1
8	S010312	BC handle		1
9	M012020	Cap, AL end pivot point	Φ60xΦ10x8.9t	1
10	M012021	Cap, AL end		1
11	M012022	Bushing, stop		1
12	M012023	Foot plate	253.5L x 28H	1
13	M012024	Screw	M5x0.8P x 12.7L	6
14	M012025	Bumper		1
15	M012026	Screw, socket head	1/4"-20UNC x 3/4"L	5
16	M012027	Washer, flat	Φ16xΦ6.5x1.0t	5

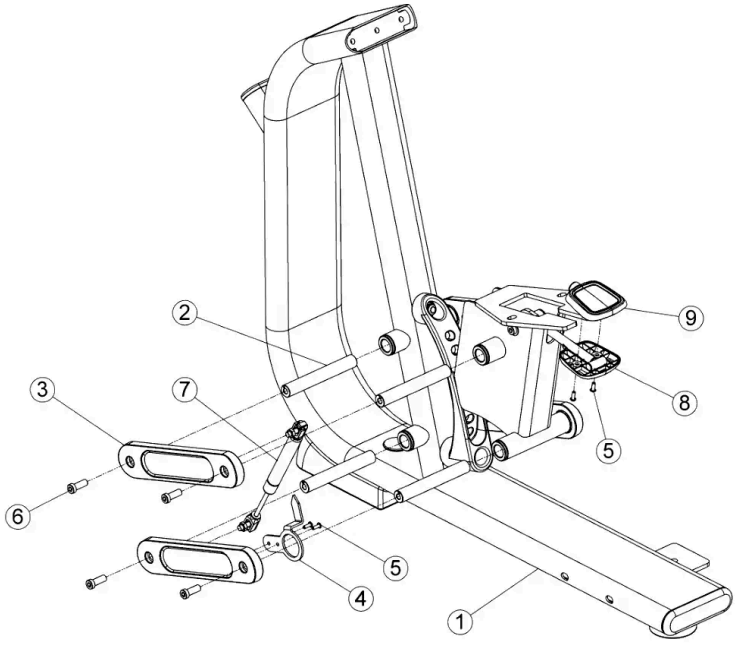

No.	Part No.	Description	Spec	Qty
1	S010313	BC frame		1
2	M012029	Pivot shaft		4
3	M012030	Link, 4-bar seat w/overmold		4
4	M012031	Bracket, seat indicator		1
5	M012012	Screw	#10-32UNF x 1/2"L (12mm)	4
6	M012235	Screw, socket head	3/8"-16UNC x 1"L (25mm)	8
7	M011957	Gas cylinder	L=226mm, Stroke=58	2
8	M012032	Cover, handle, lower		1
9	M012033	Cover, handle, upper		1