

EL-03

Lat Pulldown

SERVICE PARTS LIST

Upholstery color / Part No.

Upholstery	● Black	● Brown
Seat pad	**M012525**	**M012001**
Roller pad, short	**S010595**	**S010319**

Key parts / Part No.

Item	Part No.	Spec
Cable	**S010320**	7310L
Cable	**S010315**	1477L
Weight stack label	**M011960**	V1, 240LB
Weight stack label	**S010600**	V3, 240LB (2024/08~)

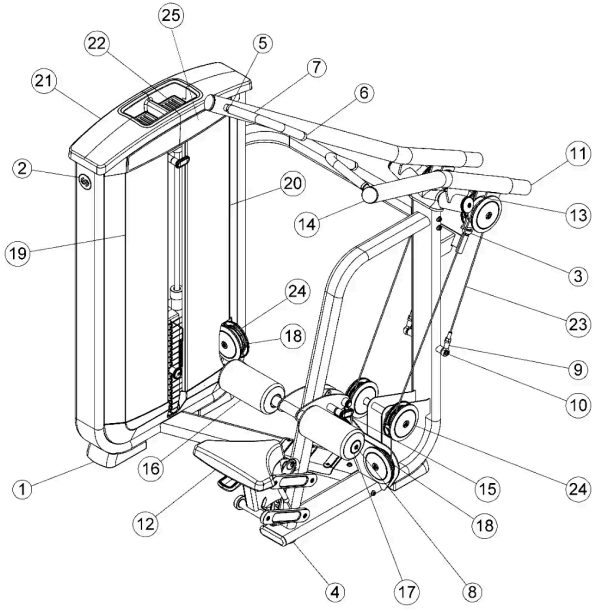

No.	Part No.	Description	Spec	Qty
1	M011995	Foot, tower	139.8Wx207.4Lx62.3h	2
2	S007957	Assy, decal	OD65x0.5t	1
3	M012041	Cushion	Φ40x43.5L	2
4	M012011	Foot Plate	Φ70x43.5L	1
5	M012044	AL ring, 31.8OD	Φ33.1xΦ26.2x10.7h	1
6	M012045	AL cap, 31.8OD	Φ33.1xΦ25.9x20.2h	1
7	M012046	Grip, foam, handle	IDΦ25.1x4.0tx390L	1
8	M012235	Screw, socket head	3/8"-16UNC x 1"L (25mm)	6
9	M012034	Rod end, M-12 female		2
10	M012035	Bolt, 11.9 DIA x 16.5mm shoulder W/NP	Φ11.9x35L (3/8"-16UNC)	2
11	M012047	Counter weight, 325 long dipped		2
12	M012525	Pad, seat ● **Black**	309Wx364Lx65h	1
12	M012001	Pad, seat ● **Brown**	309Wx364Lx65h	1
13	M012040	Pulley	ODΦ114.3xIDΦ3/8"	1
14	M012037	PTD Assy, PLC PIVOT ARM		1
15	S010318	Pin, spring 1100mm	w/Loctite	1
16	S010595	Pad, roller, short ● **Black**	ODΦ127xIDΦ40x259.6L	2
16	S010319	Pad, roller, short ● **Brown**	ODΦ127xIDΦ40x259.6L	2
17	M012048	Cap, AL roller pad	Φ50xΦ10x11.9h	2
18	M012038	Pulley	ODΦ113.5xIDΦ3/8"	7
19	M012007	Shroud, tower front (L)		1
20	M012039	Shroud, tower front (R)		1
21	M012008	Tower, cap		1
22	M012009	Tray, tower cap - large		2
23	S010320	Cable assy, LPD, 7310L	7310L	1
24	M012049	Pulley cap	ODΦ152xIDΦ16.5x16h	2
25	M012205	BC placard		2

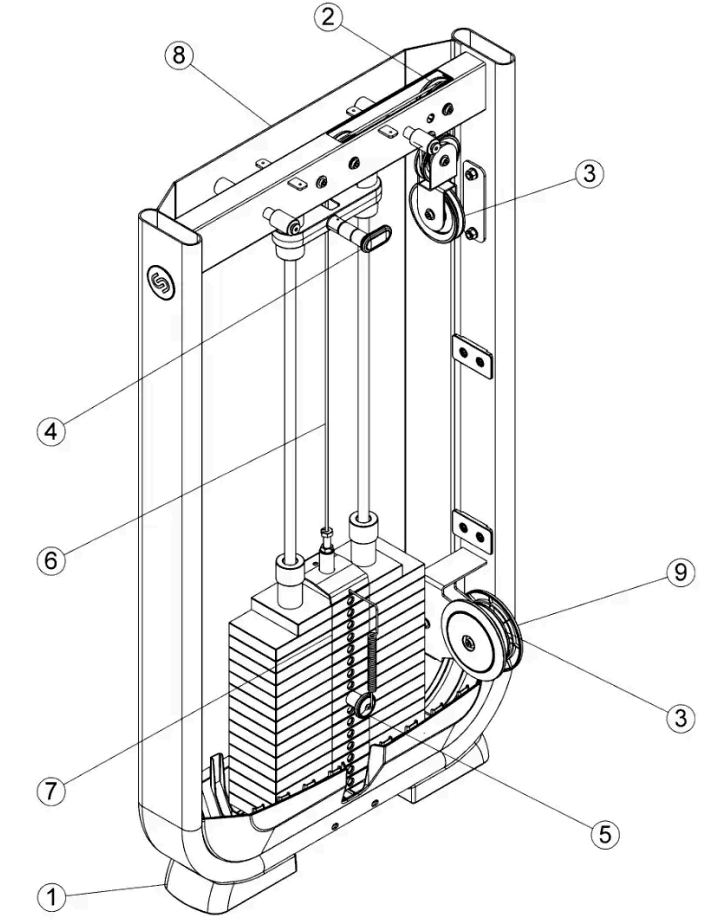

No.	Part No.	Description	Spec	Qty
1	M011995	Foot, tower	139.8Wx207.4Lx62.3h	2
2	M012014	Pulley	ODΦ89xIDΦ3/8"	2
3	M012038	Pulley	ODΦ113.5xIDΦ3/8"	7
4	S010309	Assy, 7.5lb INC. weight		1
5	M011989	Pin, head plate		1
6	S010315	Cable, EL02,03,04,10,11	1477L	1
7	M011960	Label, weight stack 240lbs	V1, 240LB	1
7	S010600	Label, weight stack 240lbs	V3, 240LB (2024/08~)	1
8	M012016	Rear shroud		1
9	M012049	Pulley cap	ODΦ152xIDΦ16.5x16h	2

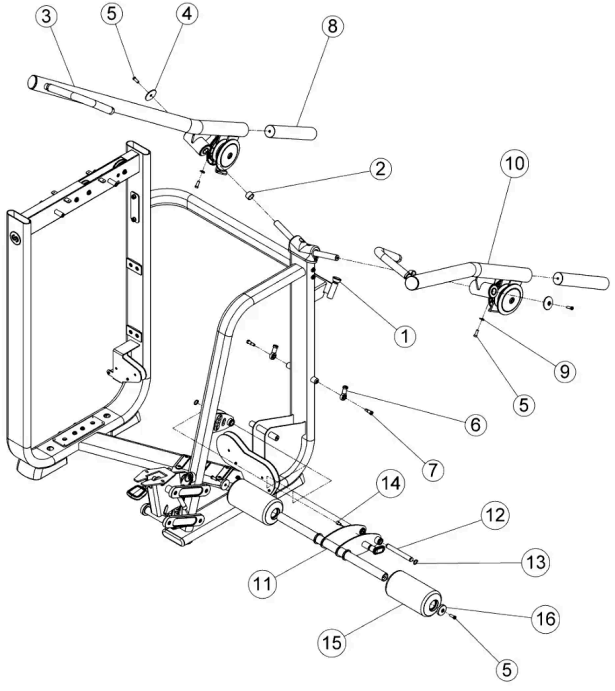

No.	Part No.	Description	Spec	Qty
1	M012041	Cushion	Φ40x43.5L	2
2	M012042	Spacer, 25.5 ID x 31.8 OD x 20		2
3	S010321	LPD pull arm (L)		1
4	M011954	Cap, AL end 6205z bearing housing	OD60xID10X8.87	2
5	M012235	Screw, socket head	3/8"-16UNC x 1"L (25mm)	6
6	M012034	Rod end, M-12 female		2
7	M012035	Bolt, 11.9 DIA x 16.5mm shoulder W/NP	Φ11.9x35L (3/8"-16UNC)	2
8	M012047	Counter weight, 325 long dipped		2
9	M011981	Washer, curve	Φ22xΦ10x1.5t	2
10	S010322	LPD pull arm (R)		1
11	S010323	WLDMT, knee hold down		1
12	M012050	Shaft, bracket, adjustment		1
13	M012051	Clip, c STW-19	STW-19	2
14	M012052	Screw, socket head	3/8"-16UNC x 1/2"L (13mm)	1
15	S010595	Pad, roller, short ● **Black**	ODΦ127xIDΦ40x259.6L	2
15	S010319	Pad, roller, short ● **Brown**	ODΦ127xIDΦ40x259.6L	2
16	M012048	Cap, AL roller pad	Φ50xΦ10x11.9h	2

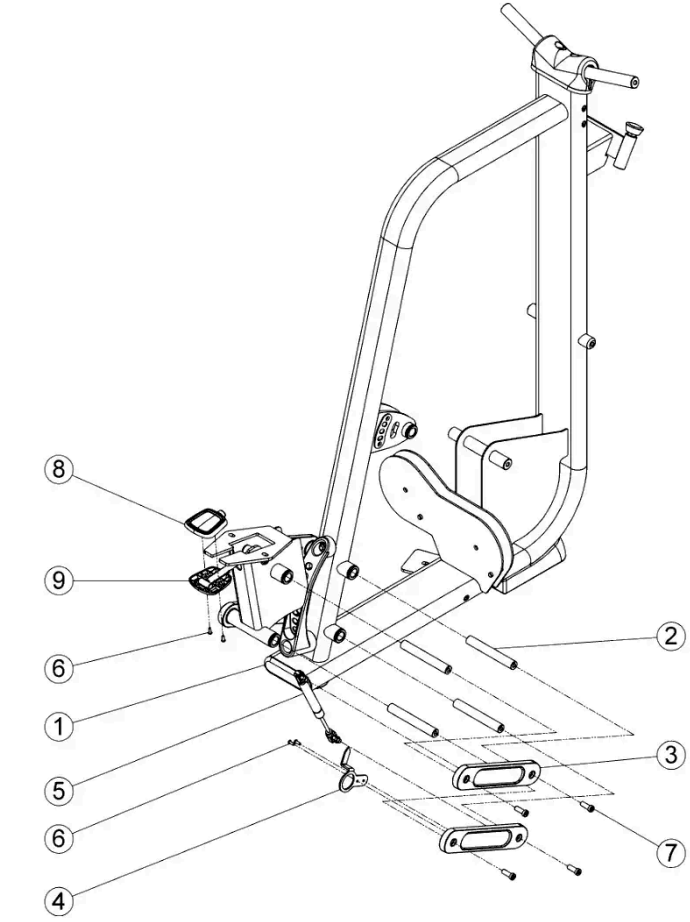

No.	Part No.	Description	Spec	Qty
1	M012010	Cap, End, FLOV	Φ40xΦ137x25H (#10-32UNF)	1
2	M012029	Shaft		4
3	M012030	Link, 4-bar seat w/overmold		4
4	M012043	Indicator		1
5	M011957	Gas cylinder	L=226mm,STROKE=58	2
6	M012012	Screw	#10-32UNF x 1/2"L	4
7	M012235	Screw, socket head	3/8"-16UNC x 1"L (25mm)	8
8	M012033	Cover, handle, upper		1
9	M012032	Cover, handle, lower		1