

EL-04

Shoulder Press

SERVICE PARTS LIST

Upholstery color / Part No.

Upholstery	● Black	● Brown
Seat pad	**M012525**	**M012001**
Assy, back pad w/cover	**M012528**	**M012055**

Key parts / Part No.

Item	Part No.	Spec
Cable	**S010324**	5470L
Cable	**S010315**	1477L
Weight stack label	**M011960**	V1, 240LB
Weight stack label	**S010600**	V3, 240LB (2024/08~)

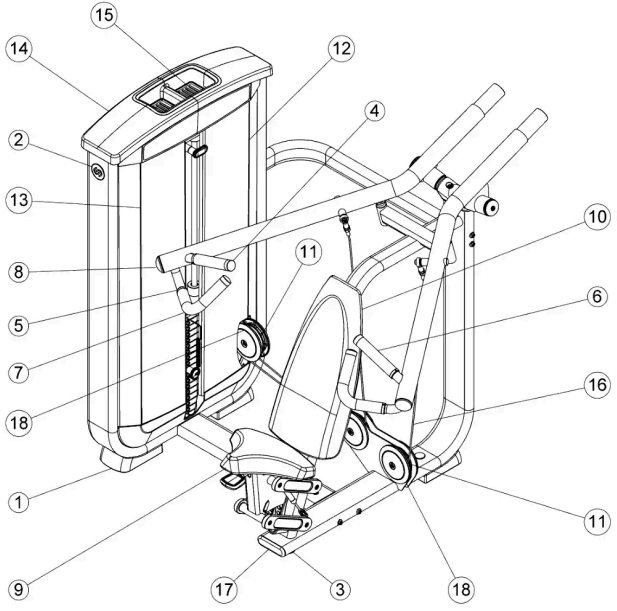

No.	Part No.	Description	Spec	Qty
1	M011995	Foot, tower	139.8Wx207.4Lx62.3h	2
2	S007957	Assy, decal	OD65x0.5t	1
3	M012011	Foot Plate	Φ70x43.5L	1
4	M012004	End Cap	Φ39.5xΦ32.5x22.2h	2
5	M012002	Fixed Bushing	Φ39.5xΦ32.5x11.1h	2
6	M012053	Grip, foam, handle	Φ31.5x4.0tx175L	1
7	M012054	Grip, foam, handle	IDΦ31.5x4.0tx305L	1
8	M012037	PTD Assy, PLC PIVOT ARM		1
9	M012525	Pad, seat ● **Black**	309Wx364Lx65h	1
9	M012001	Pad, seat ● **Brown**	309Wx364Lx65h	1
10	M012528	Assy, back pad w/cover ● **Black**		1
10	M012055	Assy, back pad w/cover ● **Brown**		1
11	M012038	Pulley	ODΦ113.5xIDΦ3/8"	5
12	M012039	Shroud, tower front (R)		1
13	M012007	Shroud, tower front (L)		1
14	M012008	Tower, cap		1
15	M012009	Tray, tower cap - large		2
16	S010324	Cable, EL04	5470L	1
17	M012010	Cap, End, FLOV	Φ40xΦ137x25H (#10-32UNF)	1
18	M012049	Pulley cap	ODΦ152xIDΦ16.5x16h	6
19	M012205	BC placard		2

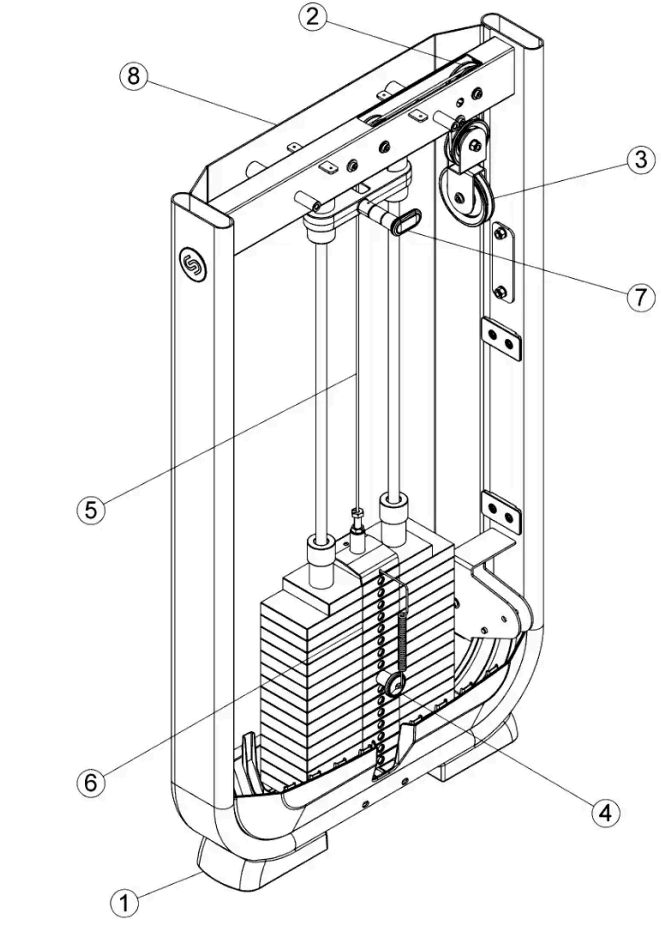

No.	Part No.	Description	Spec	Qty
1	M011995	Foot, tower	139.8Wx207.4Lx62.3h	2
2	M012014	Pulley	ODΦ89xIDΦ3/8"	2
3	M012038	Pulley	ODΦ113.5xIDΦ3/8"	5
4	M011989	Pin, head plate		1
5	S010315	Cable, EL02,03,04,10,11	1477L	1
6	M011960	Label, weight stack 240lbs	V1, 240LB	1
6	S010600	Label, weight stack 240lbs	V3, 240LB (2024/08~)	1
7	S010309	Assy, 7.5lb INC. weight		1
8	M012016	Rear shroud		1

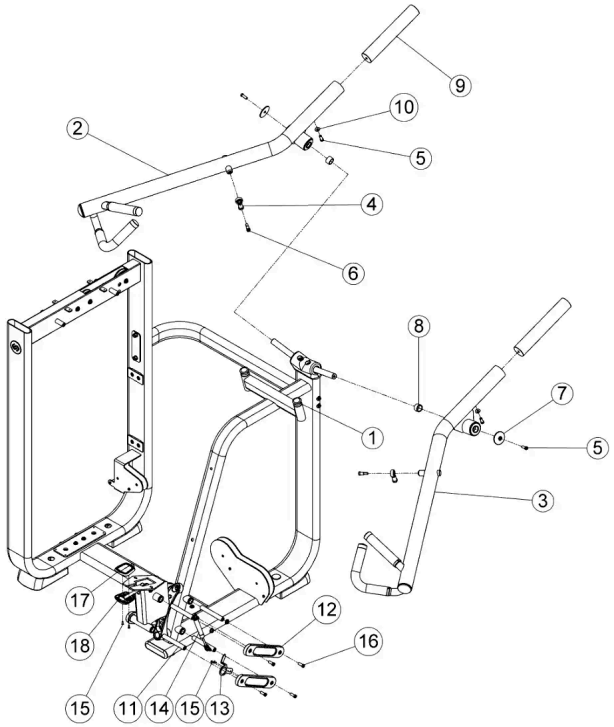

No.	Part No.	Description	Spec	Qty
1	M012041	Cushion	Φ40x43.5L	2
2	S010325	Press arm (R)		1
3	S010326	Press arm (L)		1
4	M012034	Rod end, M-12 female		2
5	M012235	Screw, socket head	3/8"-16UNC x 1"L (25mm)	4
6	M012035	Bolt, 11.9 DIA x 16.5mm shoulder W/NP	Φ11.9x35L (3/8"-16UNC)	2
7	M011954	Cap, AL end 6205z bearing housing	OD60xID10X8.87	2
8	M012042	Spacer, 25.5 ID x 31.8 OD x 20		2
9	M012047	Counter weight, 325 long dipped		2
10	M011981	Washer, curve	Φ22xΦ10x1.5t	2
11	M012029	Shaft		2
12	M012030	Link, 4-bar seat w/overmold		4
13	M012043	Indicator		1
14	M011957	Gas cylinder	L=226mm,STROKE=58	2
15	M012012	Screw	#10-32UNF x 1/2"L	4
16	M012235	Screw, socket head	3/8"-16UNC x 1"L (25mm)	8
17	M012033	Cover, handle, upper		1
18	M012032	Cover, handle, lower		1