

EL-05

Back Extension

SERVICE PARTS LIST

Upholstery color / Part No.

Upholstery	● Black	● Brown
Roller pad, long	**S010596**	**S010327**
Lumbar pad	**M012529**	**M012056**
Seat pad	**M012525**	**M012001**

Key parts / Part No.

Item	Part No.	Spec
Cable	**S010328**	
Weight stack label	**M011960**	V1, 240LB
Weight stack label	**S010600**	V3, 240LB (2024/08~)

Please quote model and Part No. when ordering.

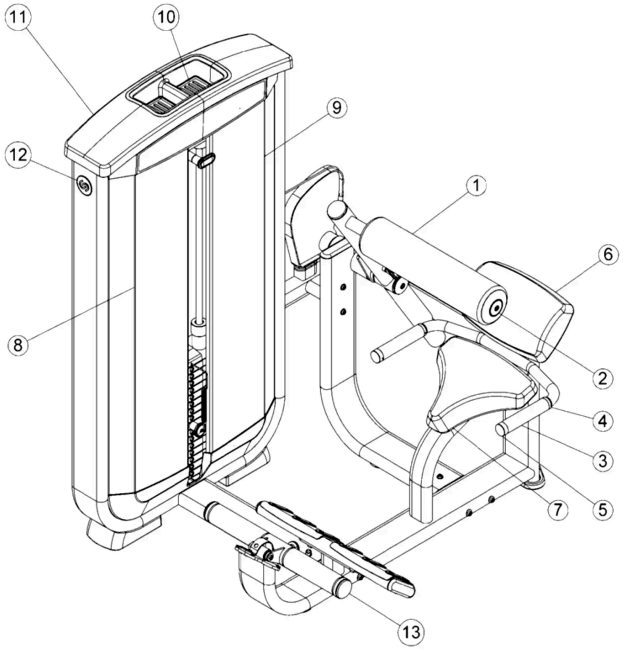

No.	Part No.	Description	Spec	Qty
1	S010596	Pad, roller, long ● **Black**	ODΦ127xIDΦ38.7x541.6L	1
1	S010327	Pad, roller, long ● **Brown**	ODΦ127xIDΦ38.7x541.6L	1
2	M012048	Cap, AL roller pad	Φ50xΦ10x11.9h	1
3	M012053	Grip, foam, handle	Φ31.5x4.0tx175L	2
4	M012002	Fixed Bushing	Φ39.5xΦ32.5x11.1h	2
5	M012004	End Cap	Φ39.5xΦ32.5x22.2h	2
6	M012529	Pad, lumbar ● **Black**	221.4W x363.9Lx88h	1
6	M012056	Pad, lumbar ● **Brown**	221.4W x363.9Lx88h	1
7	M012525	Pad, seat ● **Black**	309Wx364Lx65h	1
7	M012001	Pad, seat ● **Brown**	309Wx364Lx65h	1
8	M012007	Shroud, tower front (L)		1
9	M012006	Shroud, tower front (R)		1
10	M012009	Tray, tower cap - large		2
11	M012008	Tower, cap		1
12	S007957	Assy, decal	OD65x0.5t	1
13	M012037	PTD Assy, PLC PIVOT ARM		1
14	M012205	BC placard		2
15	X001644	Assy, cable guide, cam		1

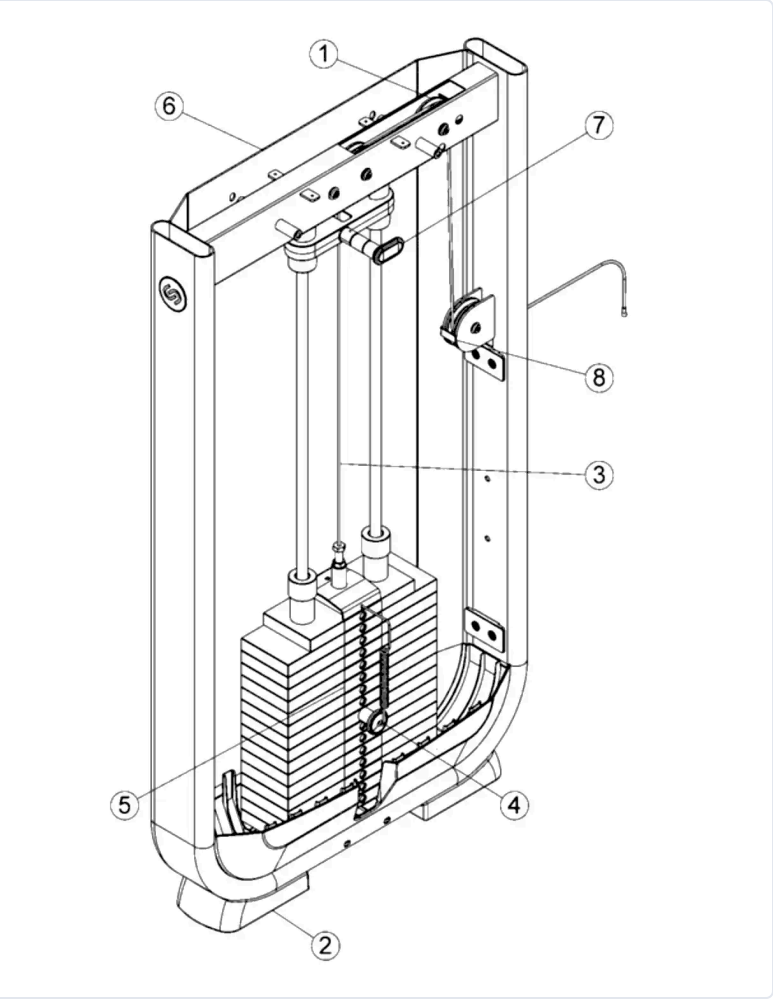

No.	Part No.	Description	Spec	Qty
1	M012014	Pulley	ODΦ89xIDΦ3/8"	3
2	M011995	Foot, tower	139.8Wx207.4Lx62.3h	2
3	S010328	Cable, EL05		1
4	M011989	Pin, head plate		1
5	M011960	Label, weight stack 240lbs	V1, 240LB	1
5	S010600	Label, weight stack 240lbs	V3, 240LB (2024/08~)	1
6	M012016	Rear shroud		1
7	S010309	Assy, 7.5lb INC. weight		1
8	M012057	Bracket, L-shaped		1

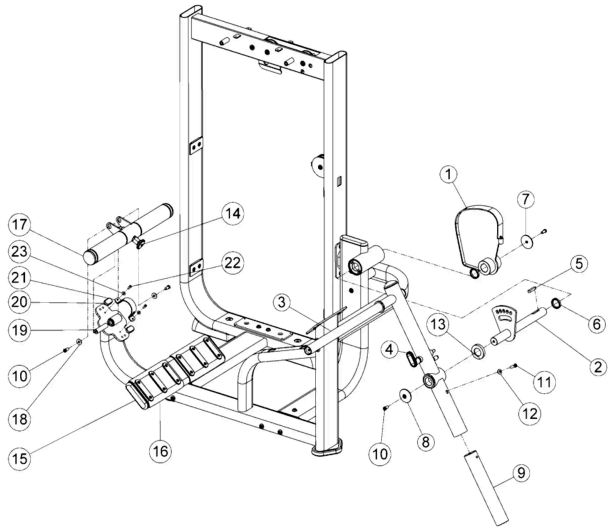

No.	Part No.	Description	Spec	Qty
1	S010329	Bracket assy		1
2	S010296	WLDMT, ADJUSTABLE START	327.3x259.39x732.5	1
3	S010330	PTD ASSY, LEG PIVOT		1
4	S010331	Adjustment lock pin		1
5	M011952	KEY, CAM SHAFT	10x8x49.5	1
6	M011978	SPACER, 35 ID X 45 OD X 8		2
7	M011954	Cap, AL end 6205z bearing housing	OD60xID10X8.87	1
8	M012020	Cap, AL end pivot point	Φ60xΦ10x8.9t	1
9	M012047	Counter weight, 325 long dipped		1
10	M012058	Screw, socket head	3/8"-16UNC x 3/4"L (20mm)	6
11	M012019	Screw, socket head	3/8"-16UNC x 4-1/2"L (114mm)	2
12	M011981	Washer, curve	Φ22xΦ10x1.5t	1
13	M011955	SPACER, PIVOT ARM	OD63.5xID35.1x12	1
14	S010332	Adjustment lock pin		1
15	M012010	Cap, End, FLOV	Φ40xΦ137x25H (#10-32UNF)	2
16	M012023	Foot plate	253.5Lx28h	2
17	S010333	Movement arm assy		1
18	M012059	Washer, flat	Φ25xΦ10x2.0t	2
19	M012060	Shaft		1
20	M012061	Cushion		2
21	M012062	Adjustment plate		1
22	M012063	Screw, socket head	1/4"-20UNC x 1/2"L	2
23	M012027	Washer, flat	Φ16xΦ6.5x1.0t	2