

EL-06

Abdominal

SERVICE PARTS LIST

Upholstery color / Part No.

Upholstery	● Black	● Brown
Seat pad, large	**M012530**	**M012204**
Seat pad	**M012525**	**M012001**
Lumbar pad	**M012529**	**M012056**
Cover, leather, knee		**M012206**

Key parts / Part No.

Item	Part No.	Spec
Weight stack label	**M011960**	V1, 240LB
Weight stack label	**S010600**	V3, 240LB (2024/08~)
Cable	**S010343**	1313L
Cable	**S010495**	AB,8230L

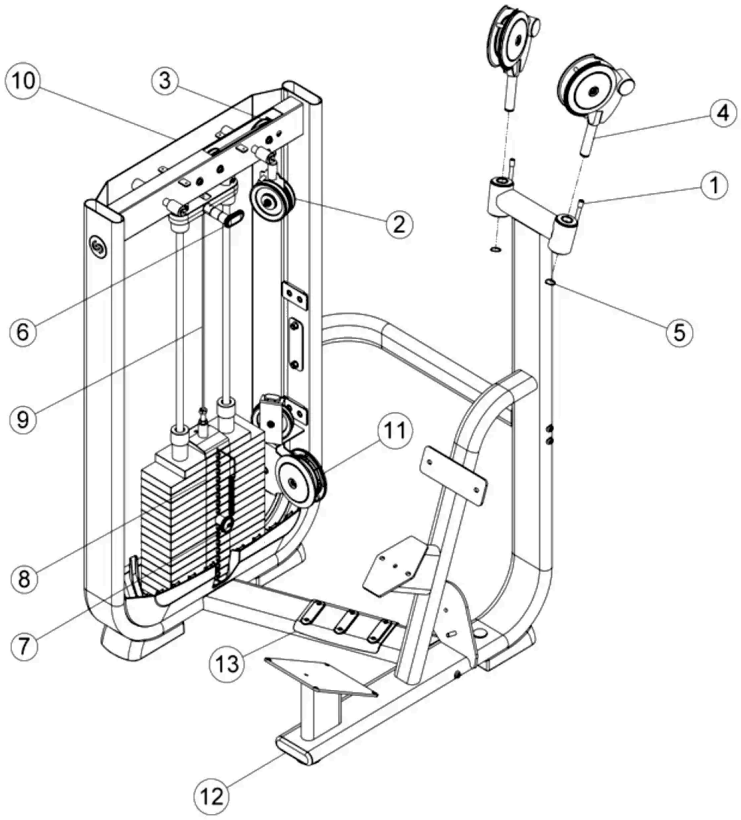

No.	Part No.	Description	Spec	Qty
1	M012207	Sleeve	Φ13xΦ10x18L	2
2	M012038	Pulley	ODΦ113.5xIDΦ3/8"	2
3	M012014	Pulley	ODΦ89xIDΦ3/8"	2
4	S010342	Pulley bracket assy		2
5	M012208	Clip, c STW-25	STW-25	2
6	S010309	Assy, 7.5lb INC. weight		1
7	M011989	Pin, head plate		1
8	M011960	Label, weight stack 240lbs	V1, 240LB	1
8	S010600	Label, weight stack 240lbs	V3, 240LB (2024/08~)	1
9	S010343	Cable, EL06	1313L	1
10	M012016	Rear shroud		1
11	M012049	Pulley cap	ODΦ152xIDΦ16.5x16h	2
12	M012010	Cap, End, FLOV	Φ40xΦ137x25H (#10-32UNF)	1
13	M012023	Foot plate	253.5Lx28h	1

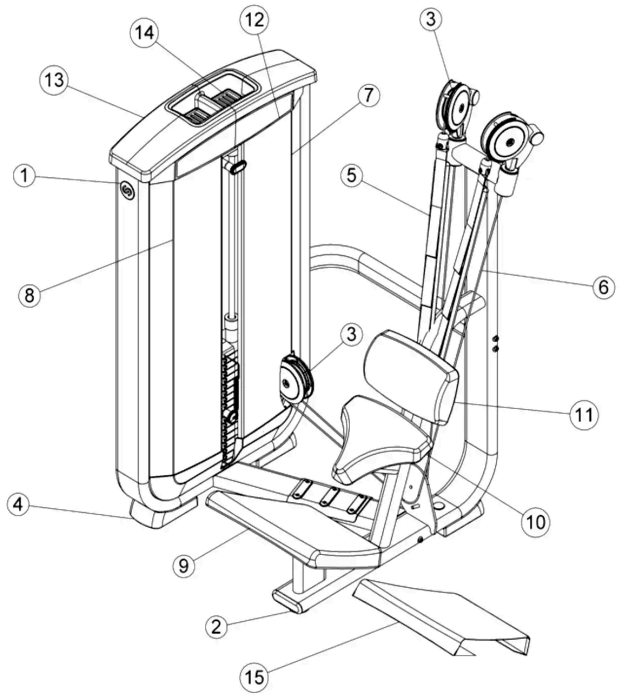

No.	Part No.	Description	Spec	Qty
1	S007957	Assy, decal	OD65x0.5t	1
2	M012011	Foot Plate	Φ70x43.5L	1
3	M012038	Pulley	ODΦ113.5xIDΦ3/8"	2
4	M011995	Foot, tower	139.8Wx207.4Lx62.3h	1
5	M012203	Assy,AB Strap		2
6	S010495	Cable, EL06	AB,8230L	1
7	M012039	Shroud, tower front (R)		1
8	M012007	Shroud, tower front (L)		1
9	M012530	Pad, seat, large ● **Black**	512.3W x477.2Lx59.5h	1
9	M012204	Pad, seat, large ● **Brown**	512.3W x477.2Lx59.5h	1
10	M012525	Pad, seat ● **Black**	309Wx364Lx65h	1
10	M012001	Pad, seat ● **Brown**	309Wx364Lx65h	1
11	M012529	Pad, lumbar ● **Black**	221.4W x363.9Lx88h	1
11	M012056	Pad, lumbar ● **Brown**	221.4W x363.9Lx88h	1
12	M012205	BC placard		2
13	M012008	Tower, cap		1
14	M012009	Tray, tower cap - large		2
15	M012206	Cover, leather, knee ● **Brown**		1