

EL-07

Leg Press / Calf

SERVICE PARTS LIST

Upholstery color / Part No.

Upholstery	● Black	● Brown
Assy, back pad w/cover	**M012528**	**M012055**
Seat pad	**M012525**	**M012001**

Key parts / Part No.

Item	Part No.	Spec
Cable	**S010344**	
Weight stack label	**M011961**	375LB
Weight stack label	**S010603**	V3, 375LB (2024/08~)

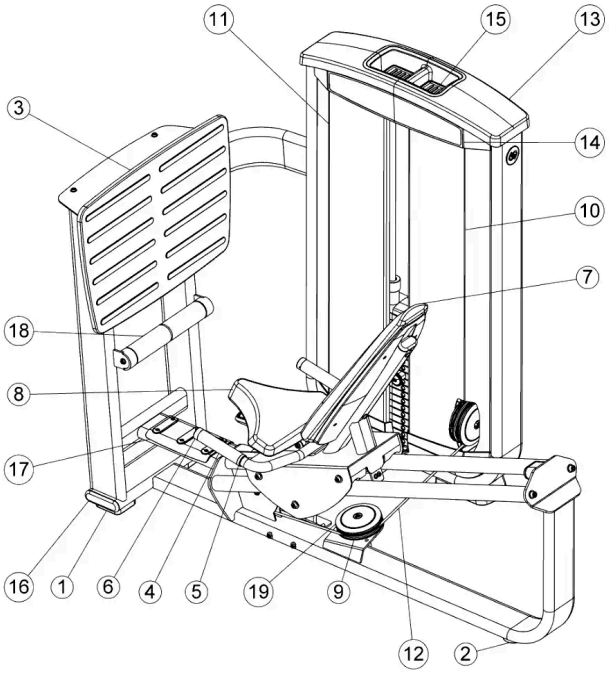

No.	Part No.	Description	Spec	Qty
1	M012209	Foot plate	98Wx98Lx28h	2
2	M012011	Foot Plate	Φ70x43.5L	1
3	M012210	Foot pad		1
4	M012003	Grip, foam, handle	IDΦ31.5x4.0tx165L	2
5	M012002	Fixed Bushing	Φ39.5xΦ32.5x11.1h	2
6	M012004	End Cap	Φ39.5xΦ32.5x22.2h	2
7	M012528	Assy, back pad w/cover ● **Black**		1
7	M012055	Assy, back pad w/cover ● **Brown**		1
8	M012525	Pad, seat ● **Black**	309Wx364Lx65h	1
8	M012001	Pad, seat ● **Brown**	309Wx364Lx65h	1
9	M012211	Pulley	ODΦ152xIDΦ3/8"	3
10	M012212	Shroud, tower front (R)		1
11	M012007	Shroud, tower front (L)		1
12	S010344	Cable, EL07		1
13	M012008	Tower, cap		1
14	M012205	BC placard		2
15	M012009	Tray, tower cap - large		2
16	M012010	Cap, End, FLOV	Φ40xΦ137x25H (#10-32UNF)	2
17	M012023	Foot plate	253.5Lx28h	1
18	M012213	Foot bar assy, chrome		1
19	M012049	Pulley cap	ODΦ152xIDΦ16.5x16h	3

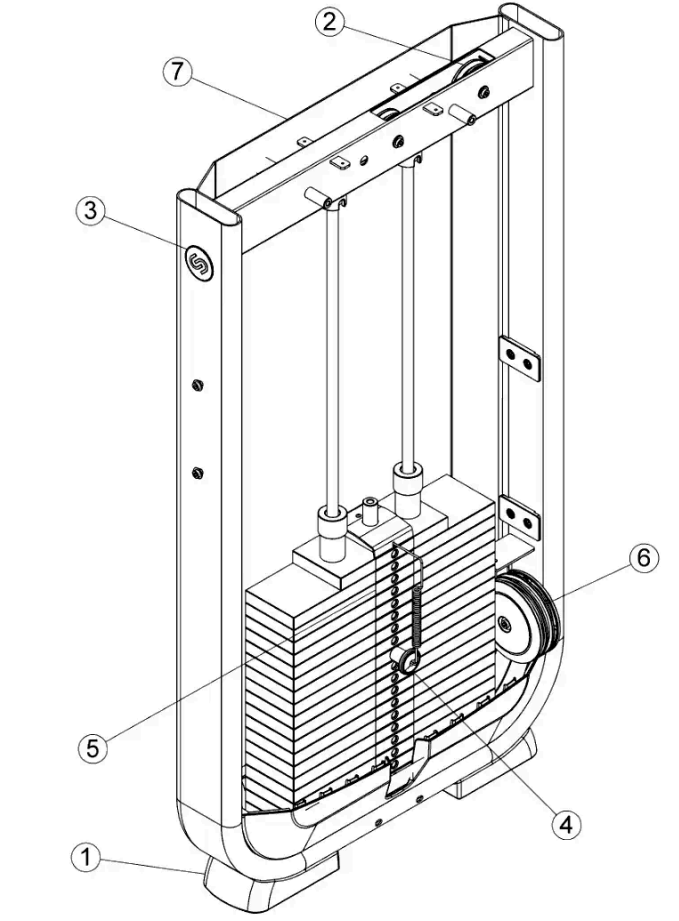

No.	Part No.	Description	Spec	Qty
1	M011995	Foot, tower	139.8Wx207.4Lx62.3h	2
2	M012014	Pulley	ODΦ89xIDΦ3/8"	2
3	S007957	Assy, decal	OD65x0.5t	1
4	M011989	Pin, head plate		1
5	M011961	Label, weight stack 375lbs	375LB	1
5	S010603	Label, weight stack 375lbs	V3, 375LB (2024/08~)	1
6	M012211	Pulley	ODΦ152xIDΦ3/8"	3
7	M012016	Rear shroud		1

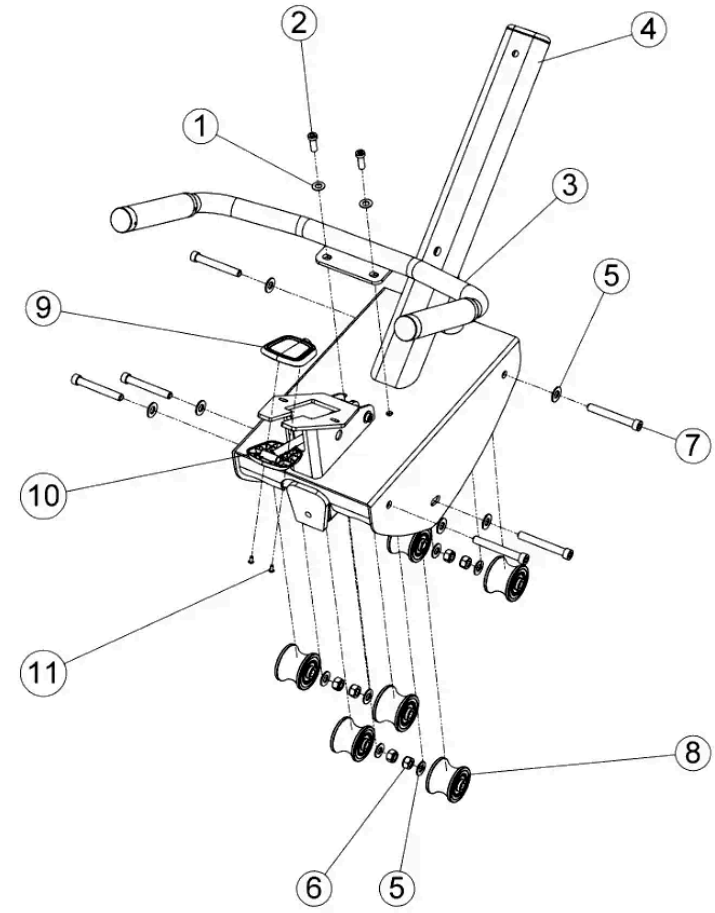

No.	Part No.	Description	Spec	Qty
1	M011985	Washer, flat	Φ20xΦ10.5x1.0t	6
2	M012235	Screw, socket head	3/8"-16UNC x 1"L (25mm)	2
3	S010345	Handle assy		1
4	S010346	Seat / back pad support assy		1
5	M012214	Washer, flat	Φ26xΦ13x2.0t	8
6	M012215	Nut	1/2"-13UNC x 12t	4
7	M012216	Screw, socket head	1/2"-13UNC x 3-1/2"L	4
8	S010347	Wheel, Roller	Bearing 6203ZZ	6
9	M012033	Cover, handle, upper		1
10	M012032	Cover, handle, lower		1
11	M012217	Screw	#10-32UNF x 9mmL	2