

EL-08

Seated Leg Curl

SERVICE PARTS LIST

Upholstery color / Part No.

Upholstery	● Black	● Brown
Roller pad, long	**S010596**	**S010327**
Assy, back pad w/cover	**M012528**	**M012055**
Seat pad, large	**M012531**	**M012219**

Key parts / Part No.

Item	Part No.	Spec
Weight stack label	**M011960**	V1, 240LB
Weight stack label	**S010600**	V3, 240LB (2024/08~)
Cable	**S010304**	

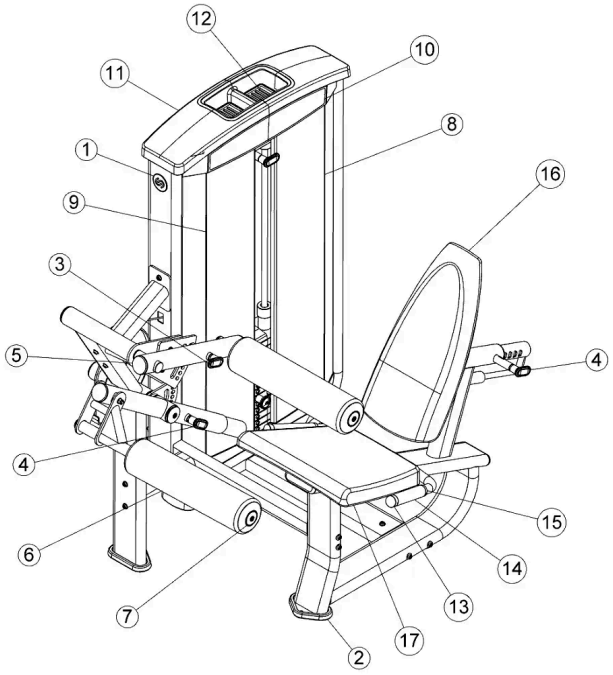

No.	Part No.	Description	Spec	Qty
1	S007957	Assy, decal	OD65x0.5t	1
2	M012218	Foot, plate	106.2Wx172Lx19H	2
3	S010348	Lock pin		1
4	S010331	Adjustment lock pin		1
5	M012037	PTD Assy, PLC PIVOT ARM		3
6	S010596	Pad, roller, long ● **Black**	ODΦ127xIDΦ38.7x541.6L	2
6	S010327	Pad, roller, long ● **Brown**	ODΦ127xIDΦ38.7x541.6L	2
7	M012048	Cap, AL roller pad	Φ50xΦ10x11.9h	2
8	M012006	Shroud, tower front (R)		1
9	M012007	Shroud, tower front (L)		1
10	M012205	BC placard		2
11	M012008	Tower, cap		1
12	M012009	Tray, tower cap - large		2
13	M012004	End Cap	Φ39.5xΦ32.5x22.2h	2
14	M012053	Grip, foam, handle	Φ31.5x4.0tx175L	2
15	M012002	Fixed Bushing	Φ39.5xΦ32.5x11.1h	2
16	M012528	Assy, back pad w/cover ● **Black**		1
16	M012055	Assy, back pad w/cover ● **Brown**		1
17	M012531	Pad, seat, large ● **Black**	512.3W x477.2Lx59.5h	1
17	M012219	Pad, seat, large ● **Brown**	512.3W x477.2Lx59.5h	1
18	X001644	Assy, cable guide, cam		1

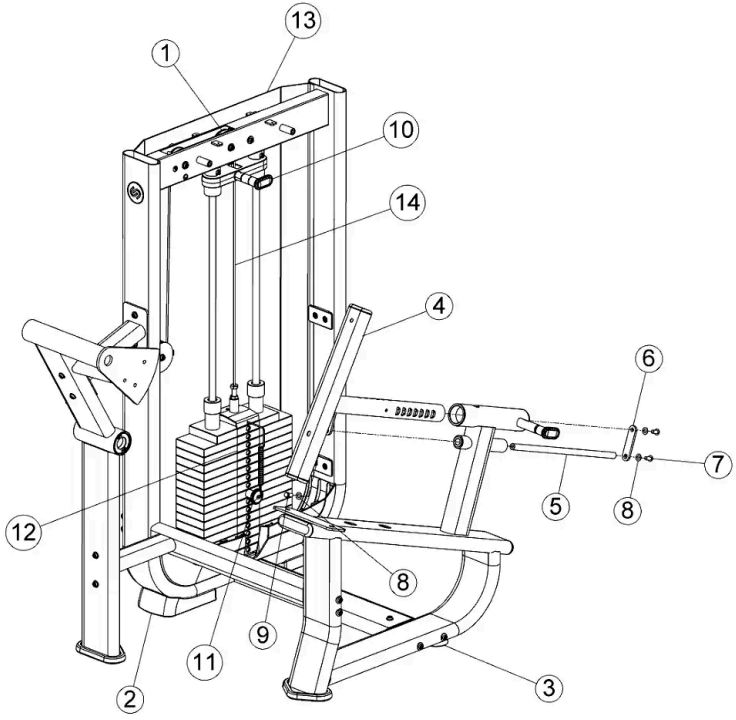

No.	Part No.	Description	Spec	Qty
1	M012014	Pulley	ODΦ89xIDΦ3/8"	3
2	M011995	Foot, tower	139.8Wx207.4Lx62.3h	2
3	M012011	Foot Plate	Φ70x43.5L	1
4	S010349	Back pad support assy		1
5	M012220	Shaft		1
6	M012221	Link plate		1
7	M012222	Screw, dome	3/8"-16UNC x 3/4"L	2
8	M011985	Washer, flat	Φ20xΦ10.5x1.0t	3
8	M012223	Washer, flat	3/8"-16UNC x 3/4"L	1
10	S010309	Assy, 7.5lb INC. weight		1
11	M011989	Pin, head plate		1
12	M011960	Label, weight stack 240lbs	V1, 240LB	1
12	S010600	Label, weight stack 240lbs	V3, 240LB (2024/08~)	1
13	M012016	Rear shroud		1
14	S010304	Cable, EL08		1

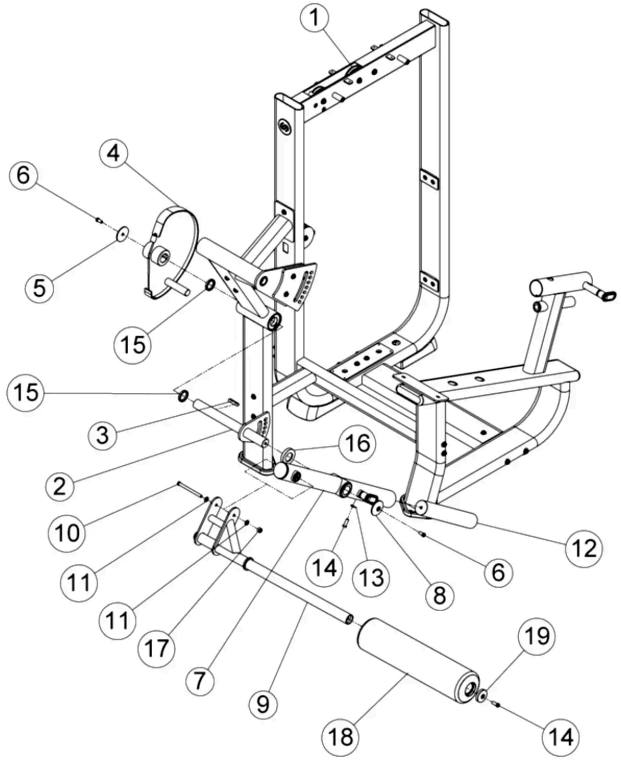

No.	Part No.	Description	Spec	Qty
1	M012014	Pulley	ODΦ89xIDΦ3/8"	3
2	S010296	WLDMT, ADJUSTABLE START	327.3x259.39x732.5	1
3	M011952	KEY, CAM SHAFT	10x8x49.5	1
4	S010299	WLDMT, SLC CAM		1
5	M011954	Cap, AL end 6205z bearing housing	OD60xID10X8.87	1
6	M012058	Screw, socket head	3/8"-16UNC x 3/4"L (20mm)	2
7	S010350	Frame assy		1
8	M012020	Cap, AL end pivot point	Φ60xΦ10x8.9t	1
9	S010300	PTD ASSY, LEG PIVOT		1
10	M012019	Screw, socket head	3/8"-16UNC x 4-1/2"L (114mm)	2
11	M011985	Washer, flat	Φ20xΦ10.5x1.0t	2
12	M012047	Counter weight, 325 long dipped		1
13	M011981	Washer, curve	Φ22xΦ10x1.5t	1
14	M012019	Screw, socket head	3/8"-16UNC x 4-1/2"L (114mm)	2
15	M011978	SPACER, 35 ID X 45 OD X 8		2
16	M011955	SPACER, PIVOT ARM	OD63.5xID35.1x12	1
17	M011986	Nut, nylon	3/8"-16UNC x 11t	1
18	S010596	Pad, roller, long ● **Black**	ODΦ127xIDΦ38.7x541.6L	1
18	S010327	Pad, roller, long ● **Brown**	ODΦ127xIDΦ38.7x541.6L	1
19	M012048	Cap, AL roller pad	Φ50xΦ10x11.9h	1

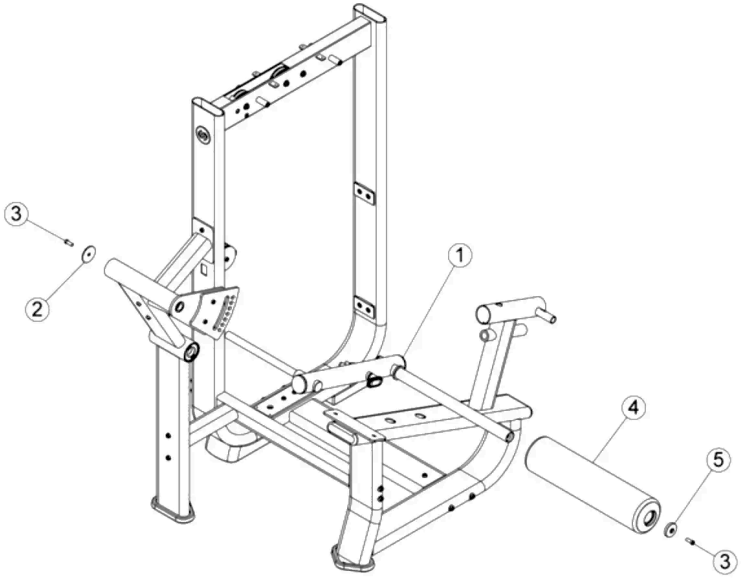

No.	Part No.	Description	Spec	Qty
1	S010351	PTD ASSY, LEG PIVOT		1
2	M011954	Cap, AL end 6205z bearing housing	OD60xID10X8.87	1
3	M012019	Screw, socket head	3/8"-16UNC x 4-1/2"L (114mm)	2
4	S010596	Pad, roller, long ● **Black**	ODΦ127xIDΦ38.7x541.6L	1
4	S010327	Pad, roller, long ● **Brown**	ODΦ127xIDΦ38.7x541.6L	1
5	M012048	Cap, AL roller pad	Φ50xΦ10x11.9h	1