

EL-09

Leg Extension

SERVICE PARTS LIST

Upholstery color / Part No.

Upholstery	● Black	● Brown
Assy, back pad w/cover	**M012528**	**M012055**
Seat pad, large	**M012531**	**M012219**
Seat pad, small	**M012532**	**M012224**
Cover, leather	**M012607**	**M012595**
Roller pad, long	**S010596**	**S010327**

Key parts / Part No.

Item	Part No.	Spec
Weight stack label	**M011960**	V1, 240LB
Weight stack label	**S010600**	V3, 240LB (2024/08~)
Cable	**S010301**	

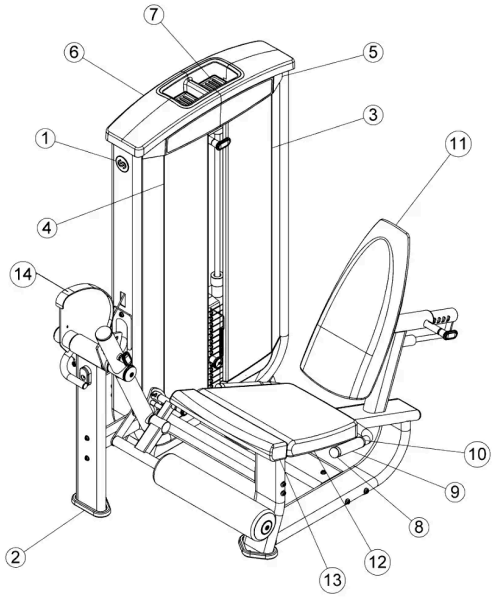

No.	Part No.	Description	Spec	Qty
1	S007957	Assy, decal	OD65x0.5t	1
2	M012218	Foot, plate	106.2Wx172Lx19H	1
3	M012006	Shroud, tower front (R)		1
4	M012007	Shroud, tower front (L)		1
5	M012205	BC placard		2
6	M012008	Tower, cap		1
7	M012009	Tray, tower cap - large		2
8	M012004	End Cap	Φ39.5xΦ32.5x22.2h	2
9	M012053	Grip, foam, handle	Φ31.5x4.0tx175L	2
10	M012002	Fixed Bushing	Φ39.5xΦ32.5x11.1h	2
10	M012528	Assy, back pad w/cover ● **Black**		2
10	M012055	Assy, back pad w/cover ● **Brown**		1
12	M012531	Pad, seat, large ● **Black**	512.3W x477.2Lx59.5h	1
12	M012219	Pad, seat, large ● **Brown**	512.3W x477.2Lx59.5h	1
13	M012532	Pad, seat, small ● **Black**	134.6W x531.3Lx60h	1
13	M012224	Pad, seat, small ● **Brown**	134.6W x531.3Lx60h	1
13.1	M012607	Cover, leather ● **Black**		1
13.1	M012595	Cover, leather ● **Brown**		1
14	X001644	Assy, cable guide, cam		1

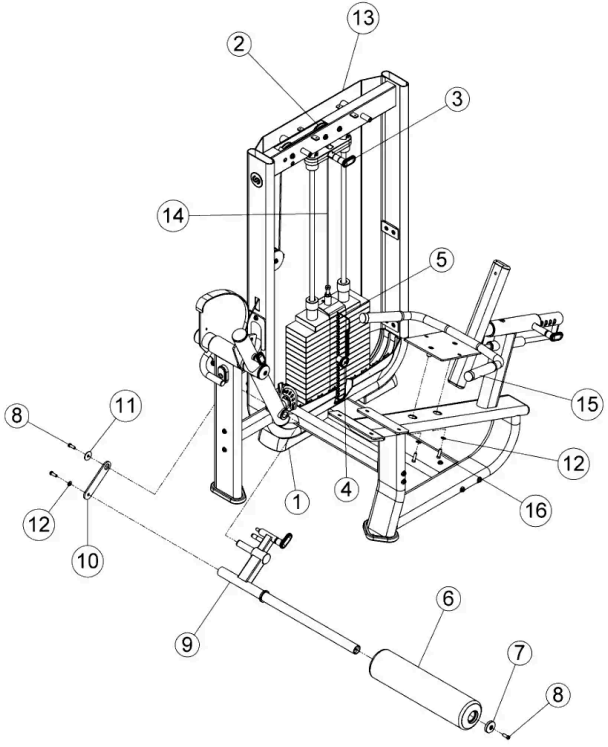

No.	Part No.	Description	Spec	Qty
1	M011995	Foot, tower	139.8Wx207.4Lx62.3h	2
2	M012014	Pulley	ODΦ89xIDΦ3/8"	3
3	S010309	Assy, 7.5lb INC. weight		1
4	M011989	Pin, head plate		1
5	M011960	Label, weight stack 240lbs	V1, 240LB	1
5	S010600	Label, weight stack 240lbs	V3, 240LB (2024/08~)	1
6	S010596	Pad, roller, long ● **Black**	ODΦ127xIDΦ38.7x541.6L	1
6	S010327	Pad, roller, long ● **Brown**	ODΦ127xIDΦ38.7x541.6L	1
7	M012048	Cap, AL roller pad	Φ50xΦ10x11.9h	1
8	M012019	Screw, socket head	3/8"-16UNC x 4-1/2"L (114mm)	3
9	S010352	PTD ASSY, LEG PIVOT		1
10	M012225	PLATE, 43 X 177 X 6MM		1
11	M012226	Washer, flat	Φ38xΦ10x2.0t	1
12	M011985	Washer, flat	Φ20xΦ10.5x1.0t	1
13	M012016	Rear shroud		1
14	S010301	Cable, EL09		1
15	S010353	Handle assy		1
16	M012018	Screw, socket head	3/8"-16UNC x 1-1/4"L (32mm)	8
17	S010331	Adjustment lock pin		1

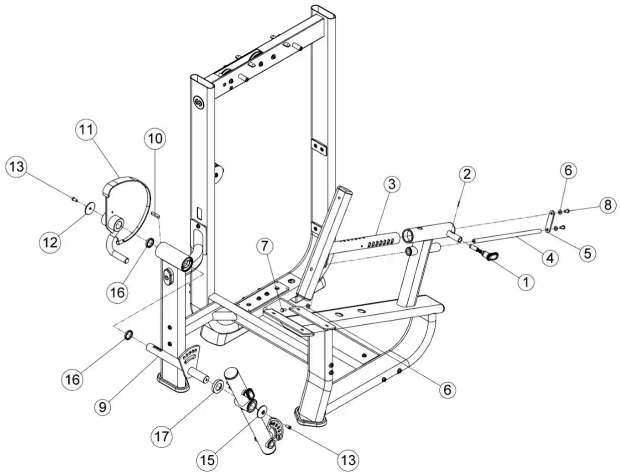

No.	Part No.	Description	Spec	Qty
1	S010348	Lock pin		1
2	M012227	Pin, cotter		
3	S010349	Back pad support assy		1
4	M012220	Shaft		1
5	M012221	Link plate		1
6	M011985	Washer, flat	Φ20xΦ10.5x1.0t	3
7	M012223	Washer, flat	3/8"-16UNC x 3/4"L	1
8	M012222	Screw, dome	3/8"-16UNC x 3/4"L	2
9	S010296	WLDMT, ADJUSTABLE START	327.3x259.39x732.5	1
10	M011952	KEY, CAM SHAFT	10x8x49.5	1
11	M011953	WLDMT, LE CAM	352.43x185x347.55	1
12	M011954	Cap, AL end 6205z bearing housing	OD60xID10X8.87	1
13	M012058	Screw, socket head	3/8"-16UNC x 3/4"L (20mm)	2
14	S010354	Frame assy		1
15	M012020	Cap, AL end pivot point	Φ60xΦ10x8.9t	1
16	M011978	SPACER, 35 ID X 45 OD X 8		2
17	M011955	SPACER, PIVOT ARM	OD63.5xID35.1x12	1