

EL-10

Seated Row

SERVICE PARTS LIST

Upholstery color / Part No.

Upholstery	● Black	● Brown
Chest pad	**M012532**	**M012229**
Seat pad		**M012534**

Key parts / Part No.

Item	Part No.	Spec
Cable	**S010355**	4535L
Cable	**S010315**	1477L
Weight stack label	**M011960**	V1, 240LB
Weight stack label	**S010600**	V3, 240LB (2024/08~)

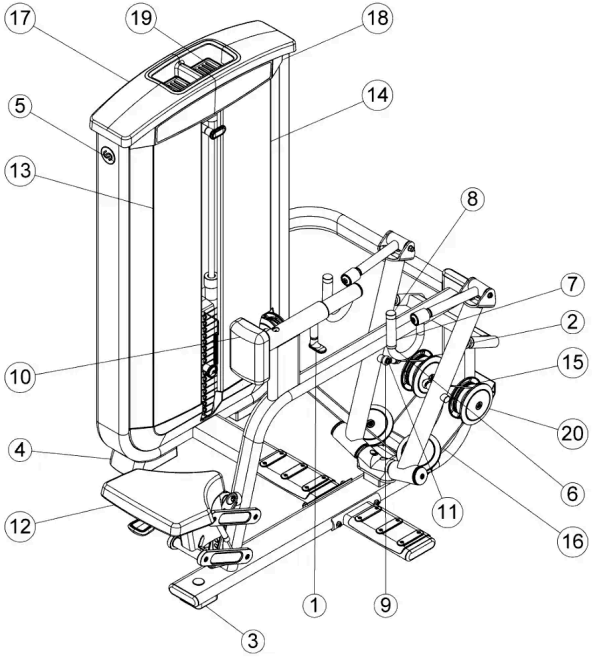

No.	Part No.	Description	Spec	Qty
1	S010318	Pin, spring 1100mm	w/Loctite	1
2	M012041	Cushion	Φ40x43.5L	2
3	M012209	Foot plate	98Wx98Lx28h	1
4	M011995	Foot, tower	139.8Wx207.4Lx62.3h	2
5	S007957	Assy, decal	OD65x0.5t	1
6	M012044	AL ring, 31.8OD	Φ33.1xΦ26.2x10.7h	1
7	M012228	Grip, 25.1IDX4mm wall	IDΦ25.1x4.0tx110L	1
8	M012045	AL cap, 31.8OD	Φ33.1xΦ25.9x20.2h	1
9	M012034	Rod end, M-12 female		2
10	M012532	Pad, chest ● **Black**	150W x205Lx63h	1
10	M012229	Pad, chest ● **Brown**	150W x205Lx63h	1
11	M012035	Bolt, 11.9 DIA x 16.5mm shoulder W/NP	Φ11.9x35L (3/8"-16UNC)	2
12	M012230	Pad, seat ● **Brown**	409Wx364Lx65h	1
12	M012534	Pad, seat ● **Brown**	409Wx364Lx65h	1
13	M012007	Shroud, tower front (L)		1
14	M012039	Shroud, tower front (R)		1
15	M012040	Pulley	ODΦ114.3xIDΦ3/8"	2
16	S010355	Cable, EL10	4535L	1
17	M012008	Tower, cap		1
18	M012205	BC placard		2
19	M012009	Tray, tower cap - large		2
20	M012049	Pulley cap	ODΦ152xIDΦ16.5x16h	8

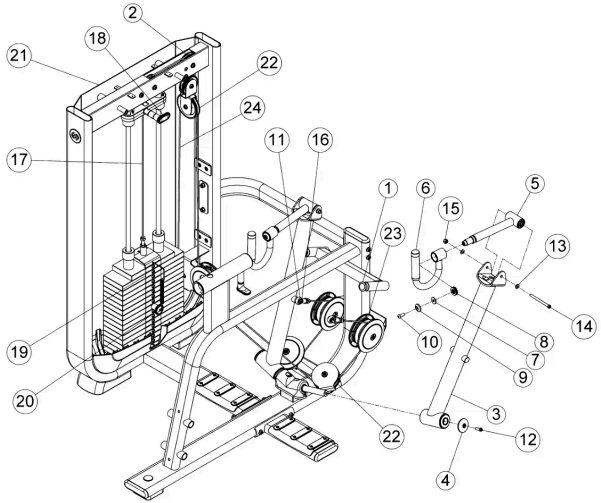

No.	Part No.	Description	Spec	Qty
1	M012041	Cushion	Φ40x43.5L	2
2	M012014	Pulley	ODΦ89xIDΦ3/8"	3
3	S010356	Movement arm assy		2
4	M011954	Cap, AL end 6205z bearing housing	OD60xID10X8.87	2
5	S010357	Handle assy		1
6	S010358	Handle assy		1
7	M012231	Washer, flat	Φ30xΦ10.5x2.5t	1
8	M012232	Roller bearing		1
9	M012233	CAP, AL ROLLER PAD		1
9	M012033	Cover, handle, upper		1
10	M012234	Screw, dome	3/8"-16UNC x 1"L	1
11	M012034	Rod end, M-12 female		2
12	M012235	Screw, socket head	3/8"-16UNC x 1"L (25mm)	2
13	M011985	Washer, flat	Φ20xΦ10.5x1.0t	8
14	M012019	Screw, socket head	3/8"-16UNC x 4-1/2"L (114mm)	2
15	M011986	Nut, nylon	3/8"-16UNC x 11t	2
16	M012035	Bolt, 11.9 DIA x 16.5mm shoulder W/NP	Φ11.9x35L (3/8"-16UNC)	2
17	S010315	Cable, EL02,03,04,10,11	1477L	1
18	S010309	Assy, 7.5lb INC. weight		1
19	M011960	Label, weight stack 240lbs	V1, 240LB	1
19	S010600	Label, weight stack 240lbs	V3, 240LB (2024/08~)	1
20	M011989	Pin, head plate		1
21	M012016	Rear shroud		1
22	M012038	Pulley	ODΦ113.5xIDΦ3/8"	5
23	M012040	Pulley	ODΦ114.3xIDΦ3/8"	2
24	S010355	Cable, EL10	4535L	1

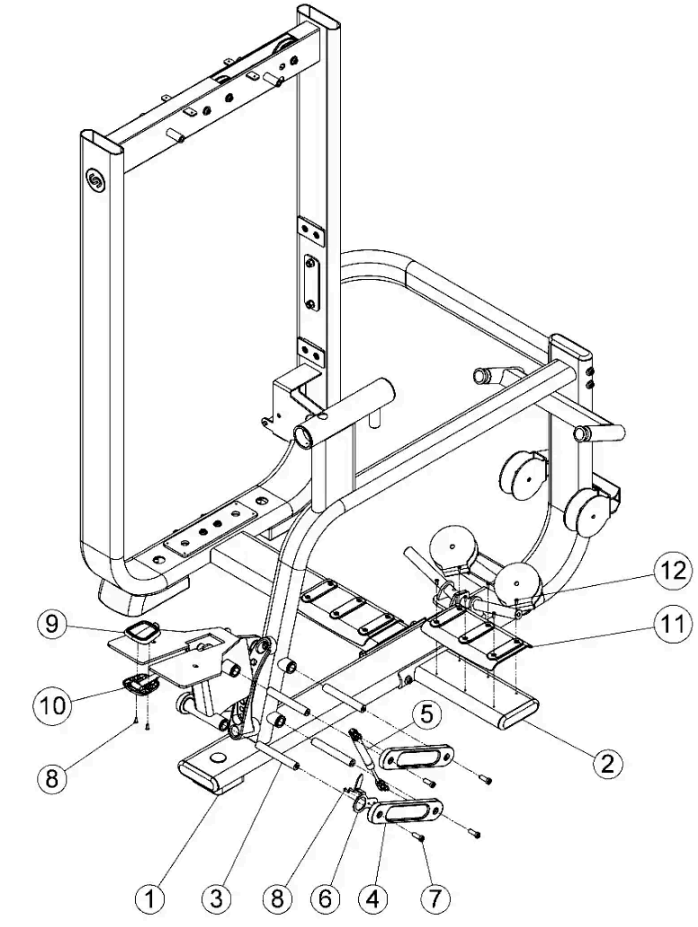

No.	Part No.	Description	Spec	Qty
1	M012209	Foot plate	98Wx98Lx28h	1
2	M012010	Cap, End, FLOV	Φ40xΦ137x25H (#10-32UNF)	2
3	M012029	Shaft		2
4	M012030	Link, 4-bar seat w/overmold		4
5	M011957	Gas cylinder	L=226mm,STROKE=58	2
6	M012043	Indicator		1
7	M012235	Screw, socket head	3/8"-16UNC x 1"L (25mm)	8
8	M012012	Screw	#10-32UNF x 1/2"L	4
10	M012032	Cover, handle, lower		1
11	M012023	Foot plate	253.5Lx28h	2
12	M012024	Screw	M5x0.8Px12.7L	12