

EL-11

Seated Dip

SERVICE PARTS LIST

Upholstery color / Part No.

Upholstery	● Black	● Brown
Seat pad	**M012525**	**M012001**
Assy, back pad w/cover	**M012528**	**M012055**

Key parts / Part No.

Item	Part No.	Spec
Cable	**S010359**	2930L
Cable	**S010315**	1477L
Weight stack label	**M011960**	V1, 240LB
Weight stack label	**S010600**	V3, 240LB (2024/08~)

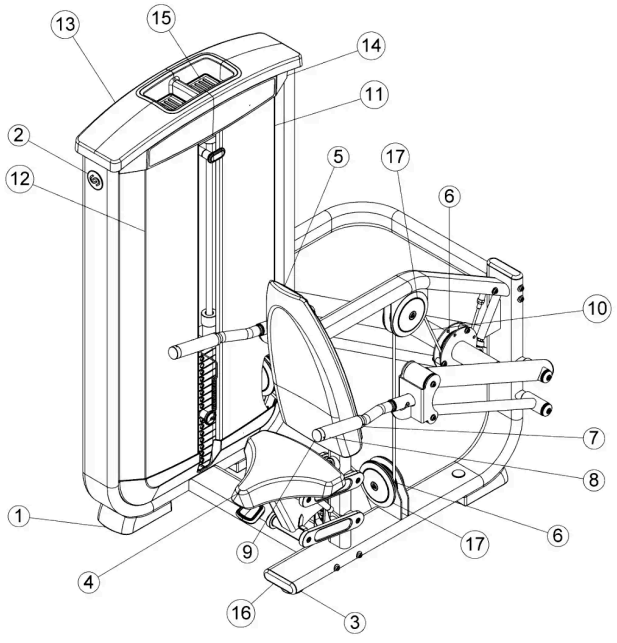

No.	Part No.	Description	Spec	Qty
1	M011995	Foot, tower	139.8Wx207.4Lx62.3h	2
2	S007957	Assy, decal	OD65x0.5t	1
3	M012011	Foot Plate	Φ70x43.5L	1
4	M012525	Pad, seat ● **Black**	309Wx364Lx65h	1
4	M012001	Pad, seat ● **Brown**	309Wx364Lx65h	1
5	M012055	Assy, back pad w/cover ● **Brown**		1
5	M012238	Spacer		1
5	M012528	Assy, back pad w/cover ● **Black**		1
6	M012038	Pulley	ODΦ113.5xIDΦ3/8"	1
7	M012002	Fixed Bushing	Φ39.5xΦ32.5x11.1h	1
8	M012003	Grip, foam, handle	IDΦ31.5x4.0tx165L	1
9	M012004	End Cap	Φ39.5xΦ32.5x22.2h	1
10	S010359	Cable, EL11	2930L	1
11	M012039	Shroud, tower front (R)		1
12	M012007	Shroud, tower front (L)		1
13	M012008	Tower, cap		1
14	M012205	BC placard		2
15	M012009	Tray, tower cap - large		2
16	M012010	Cap, End, FLOV	Φ40xΦ137x25H (#10-32UNF)	2
17	M012049	Pulley cap	ODΦ152xIDΦ16.5x16h	6

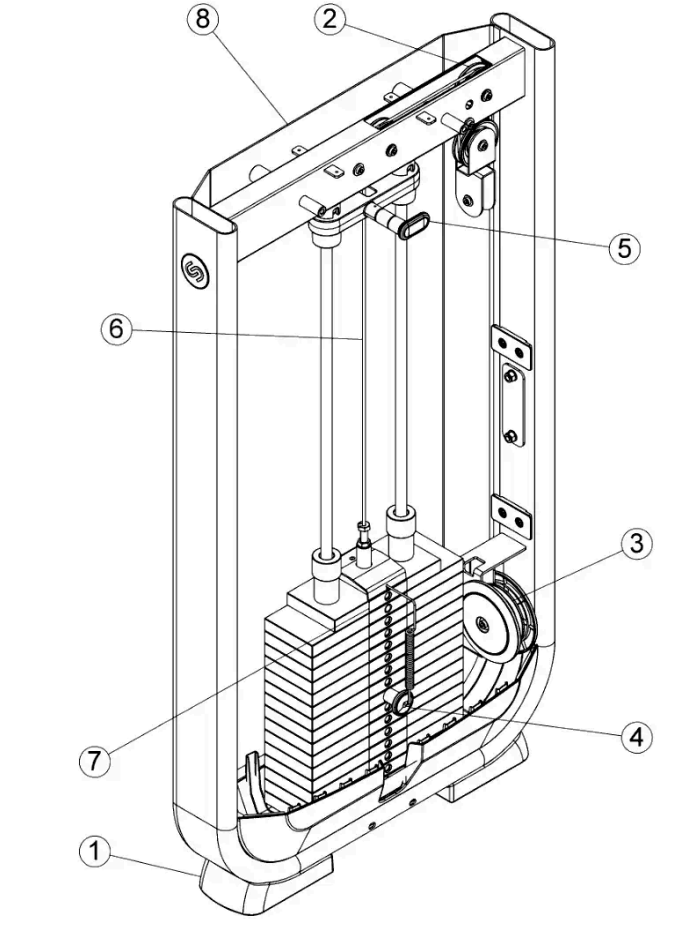

No.	Part No.	Description	Spec	Qty
1	M011995	Foot, tower	139.8Wx207.4Lx62.3h	2
2	M012014	Pulley	ODΦ89xIDΦ3/8"	2
3	M012038	Pulley	ODΦ113.5xIDΦ3/8"	1
4	M011989	Pin, head plate		1
5	S010309	Assy, 7.5lb INC. weight		1
6	S010315	Cable, EL02,03,04,10,11	1477L	1
7	M011960	Label, weight stack 240lbs	V1, 240LB	1
7	S010600	Label, weight stack 240lbs	V3, 240LB (2024/08~)	1
8	M012016	Rear shroud		1

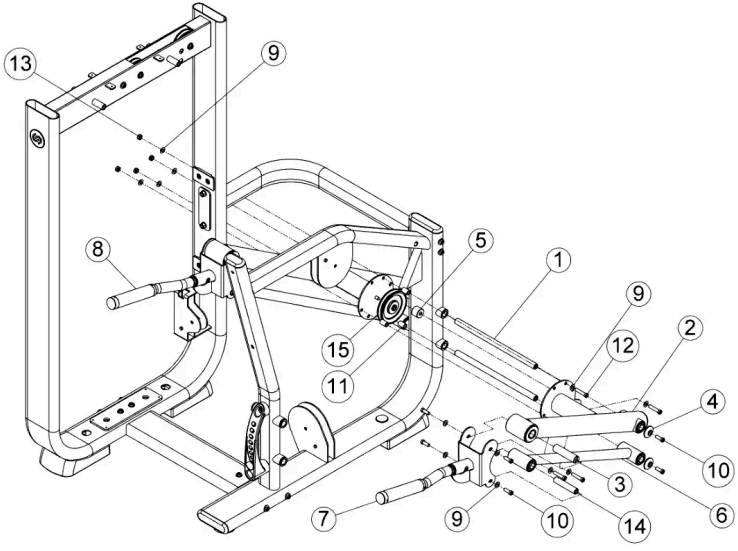

No.	Part No.	Description	Spec	Qty
1	M012236	Shaft		2
2	S010360	Movement arm assy		2
3	M012237	Shaft		2
4	M012021	CAP, AL ROLLER PAD		4
6	S010361	Movement arm assy		2
7	S010362	U-link assy		1
8	S010363	U-link assy		1
9	M012223	Washer, flat	Φ20xΦ10.5x1.0t	16
10	M012019	Screw, socket head	3/8"-16UNC x 4-1/2"L (114mm)	12
11	M012239	Spacer		3
12	M012240	Screw, socket head	3/8"-16UNC x 1-3/4"L	4
13	M012241	Nut, nylon	3/8"-16UNC x 7.2t	4
14	M012242	Shaft		2
15	M012038	Pulley	ODΦ113.5xIDΦ3/8"	3

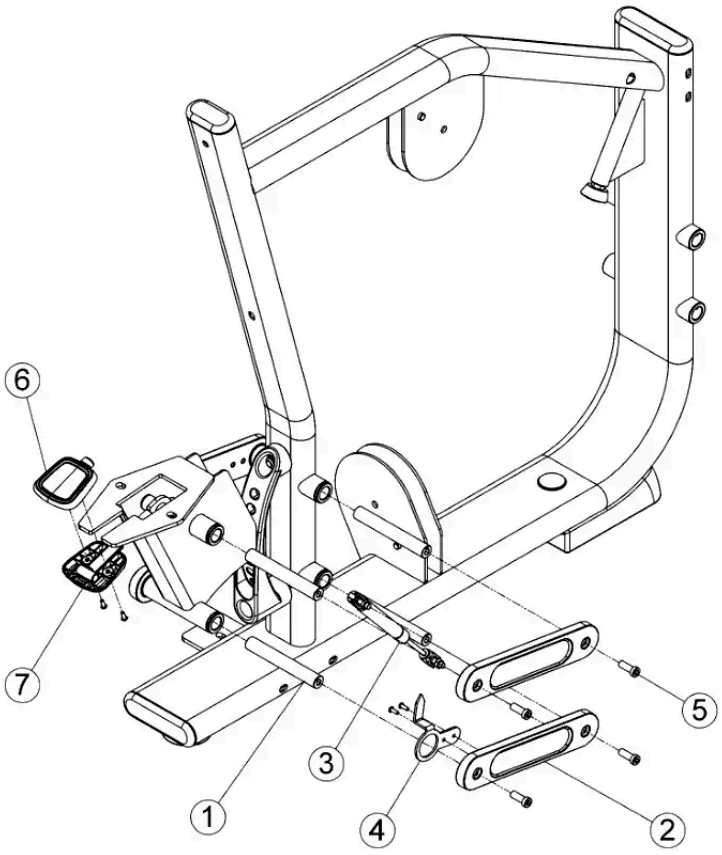

No.	Part No.	Description	Spec	Qty
1	M012029	Shaft		2
2	M012030	Link, 4-bar seat w/overmold		4
3	M011957	Gas cylinder	L=226mm,STROKE=58	2
4	M012043	Indicator		1
5	M012019	Screw, socket head	3/8"-16UNC x 4-1/2"L (114mm)	8
6	M012033	Cover, handle, upper		1
7	M012032	Cover, handle, lower		1