

EL-12

Weight Assisted Chin / Dip

SERVICE PARTS LIST

Key parts / Part No.

Item	Part No.	Spec
Cable	**S010364**	
Weight stack label	**M011960**	V1, 240LB
Weight stack label	**S010600**	V3, 240LB (2024/08~)

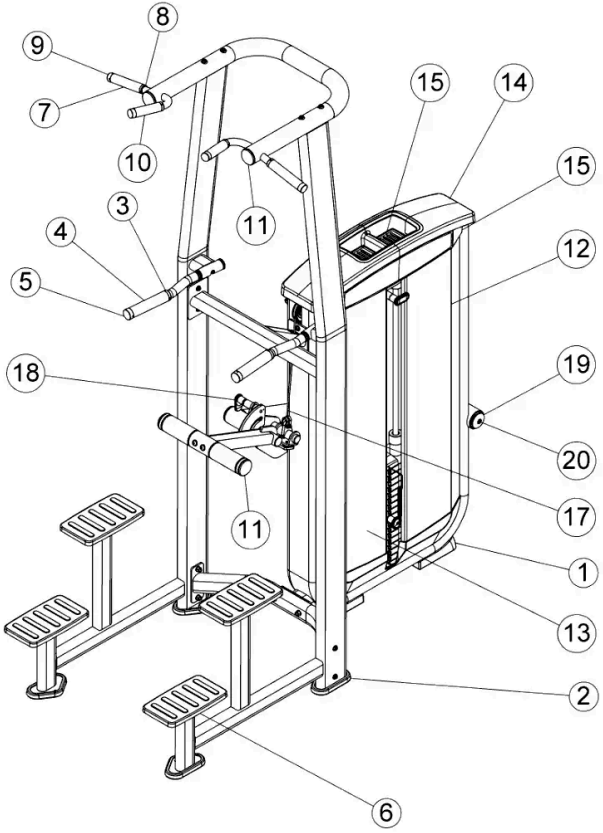

No.	Part No.	Description	Spec	Qty
1	M011995	Foot, tower	139.8Wx207.4Lx62.3h	2
2	M012218	Foot, plate	106.2Wx172Lx19H	2
3	M012002	Fixed Bushing	Φ39.5xΦ32.5x11.1h	1
4	M012003	Grip, foam, handle	IDΦ31.5x4.0tx165L	1
5	M012004	End Cap	Φ39.5xΦ32.5x22.2h	1
6	M012243	Foot, plate		2
7	M012244	Grip, foam, handle	IDΦ25.1x4.0tx150L	2
8	M012044	AL ring, 31.8OD	Φ33.1xΦ26.2x10.7h	4
9	M012045	AL cap, 31.8OD	Φ33.1xΦ25.9x20.2h	4
10	M012228	Grip, 25.1IDX4mm wall	IDΦ25.1x4.0tx110L	2
11	M012037	PTD Assy, PLC PIVOT ARM		2
12	M012006	Shroud, tower front (R)		1
13	M012007	Shroud, tower front (L)		1
14	M012008	Tower, cap		1
15	M012205	BC placard		2
16	M012009	Tray, tower cap - large		2
17	S010364	Cable, EL12		1
18	S010318	Pin, spring 1100mm	w/Loctite	1
19	M011954	Cap, AL end 6205z bearing housing	OD60xID10X8.87	2
20	M012019	Screw, socket head	3/8"-16UNC x 4-1/2"L (114mm)	2

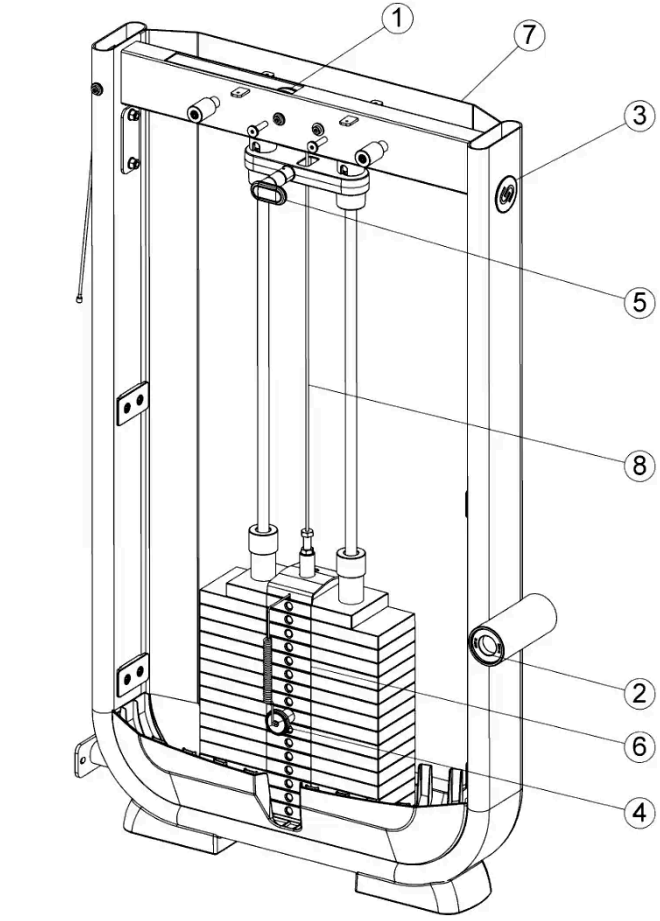

No.	Part No.	Description	Spec	Qty
1	M012014	Pulley	ODΦ89xIDΦ3/8"	2
2	M012245	Bearing	6007ZZ	2
3	S007957	Assy, decal	OD65x0.5t	1
4	M011989	Pin, head plate		1
5	S010309	Assy, 7.5lb INC. weight		1
6	M011960	Label, weight stack 240lbs	V1, 240LB	1
6	S010600	Label, weight stack 240lbs	V3, 240LB (2024/08~)	1
7	M012016	Rear shroud		1
8	S010364	Cable, EL12		1

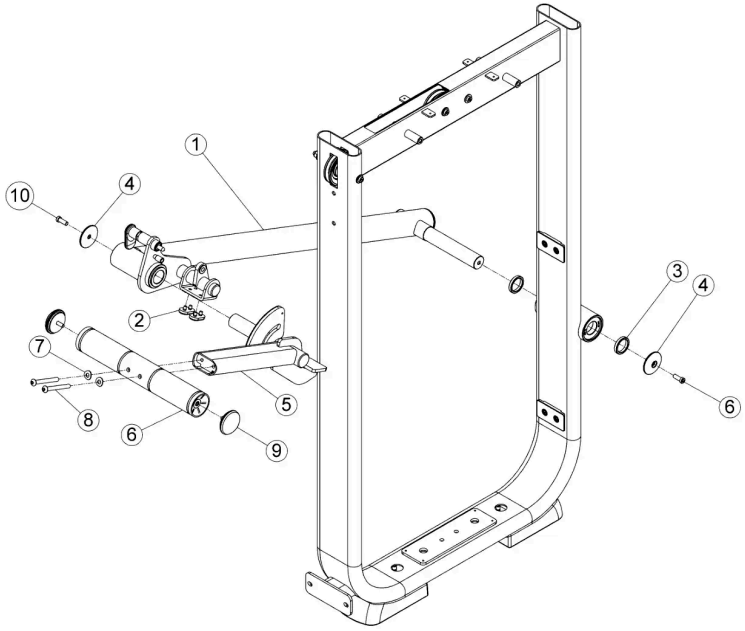

No.	Part No.	Description	Spec	Qty
1	S010365	Movement arm assy		1
2	M012061	Cushion		2
3	M011978	SPACER, 35 ID X 45 OD X 8		2
4	M011954	Cap, AL end 6205z bearing housing	OD60xID10X8.87	2
5	S010366	Movement arm assy		1
6	M011981	Washer, curve	Φ22xΦ10x1.5t	2
6	S010367	Tube, foot support		1
8	M012246	Screw, dome	3/8"-16UNC x 3-1/2"L	2
9	M012037	PTD Assy, PLC PIVOT ARM		2
10	M012019	Screw, socket head	3/8"-16UNC x 4-1/2"L (114mm)	2