

EL-13

Hip Abduction / Adduction

SERVICE PARTS LIST

Upholstery color / Part No.

Upholstery	● Black	● Brown
Assy, back pad w/cover	**M012528**	**M012055**
Seat pad	**M012525**	**M012001**
Head pad	**M012535**	**M012307**

Key parts / Part No.

Item	Part No.	Spec
Cable	**S010519**	4613L
Weight stack label	**M011960**	V1, 240LB
Weight stack label	**S010600**	V3, 240LB (2024/08~)

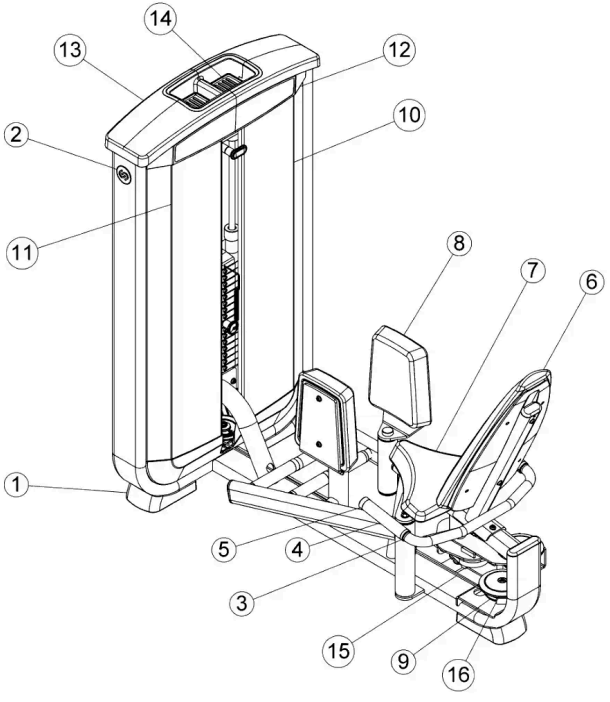

No.	Part No.	Description	Spec	Qty
1	M011995	Foot, tower	139.8Wx207.4Lx62.3h	2
2	S007957	Assy, decal	OD65x0.5t	1
3	M012002	Fixed Bushing	Φ39.5xΦ32.5x11.1h	2
4	M012053	Grip, foam, handle	Φ31.5x4.0tx175L	2
5	M012004	End Cap	Φ39.5xΦ32.5x22.2h	2
6	M012528	Assy, back pad w/cover ● **Black**		1
6	M012055	Assy, back pad w/cover ● **Brown**		1
7	M012525	Pad, seat ● **Black**	309Wx364Lx65h	1
7	M012001	Pad, seat ● **Brown**	309Wx364Lx65h	1
8	M012535	Pad, head ● **Black**	249.5W x297.2Lx63.5h	2
8	M012307	Pad, head ● **Brown**	249.5W x297.2Lx63.5h	2
9	M012038	Pulley	ODΦ113.5xIDΦ3/8"	4
10	M012006	Shroud, tower front N/O		1
11	M012007	Shroud, tower front (L)		1
12	M012205	BC placard		2
13	M012008	Tower, cap		1
14	M012009	Tray, tower cap - large		2
15	S010519	Cable, EL13	4613L	1
16	M012049	Pulley cap	ODΦ152xIDΦ16.5x16h	2
17	X001588	optimization parts for EL-13		1

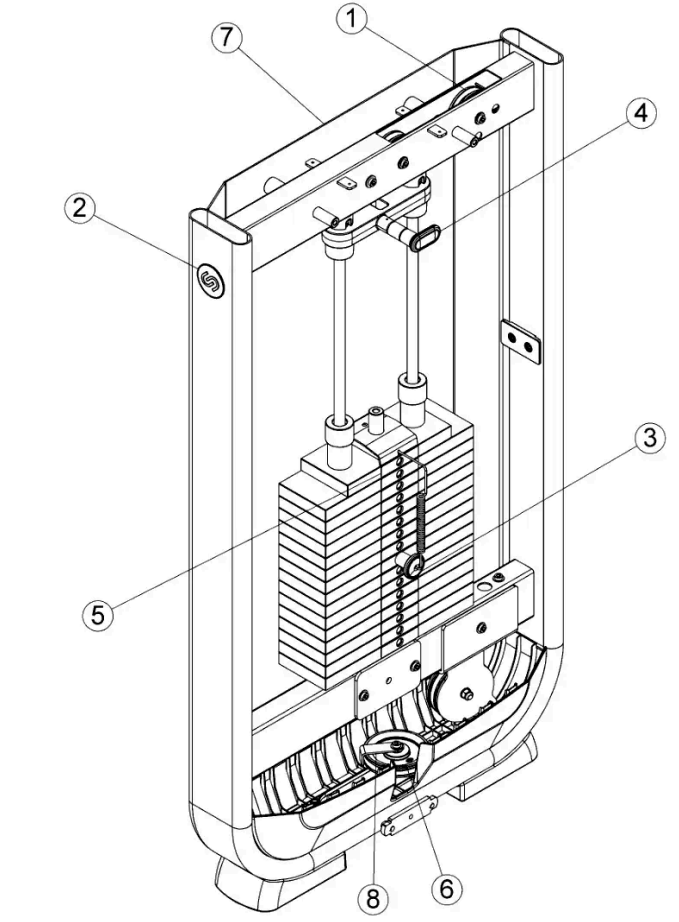

No.	Part No.	Description	Spec	Qty
1	M012014	Pulley	ODΦ89xIDΦ3/8"	2
2	S007957	Assy, decal	OD65x0.5t	1
3	M011989	Pin, head plate		1
4	S010309	Assy, 7.5lb INC. weight		1
5	M011960	Label, weight stack 240lbs	V1, 240LB	1
5	S010600	Label, weight stack 240lbs	V3, 240LB (2024/08~)	1
6	M012038	Pulley	ODΦ113.5xIDΦ3/8"	4
7	M012016	Rear shroud		1
8	M012308	Bracket, L-shaped		2

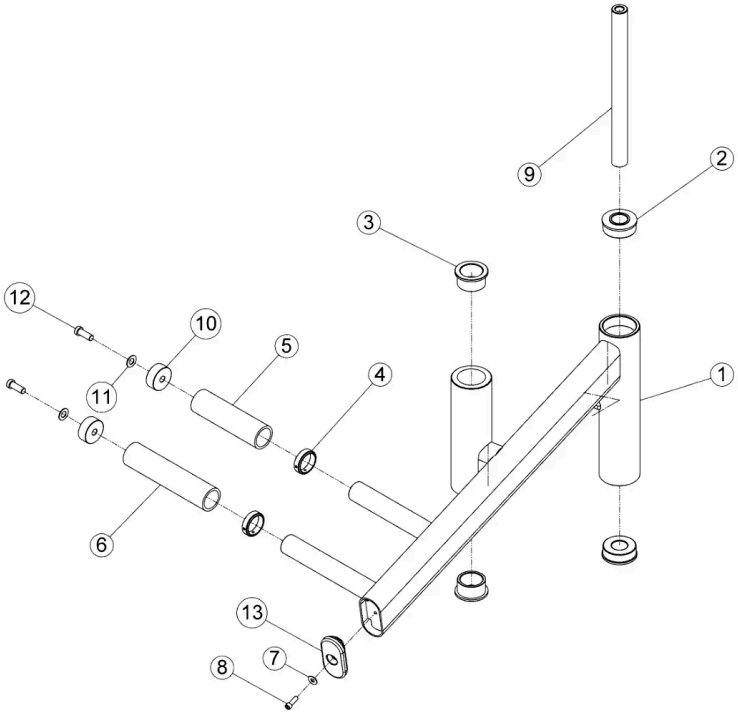

No.	Part No.	Description	Spec	Qty
1	S010374	Frame assy		1
2	M010309			2
3	M012310	Oil-impregnated bushing		2
4	M012002	Fixed Bushing	Φ39.5xΦ32.5x11.1h	2
5	M012311	Grip, foam, handle		1
6	M012053	Grip, foam, handle	Φ31.5x4.0tx175L	1
7	M012027	Washer, flat	Φ16xΦ6.5x1.0t	1
8	M012026	Screw, socket head	1/4"-20UNC x 3/4"L	1
9	M012312	Sleeve		1
10	M012313	Cushion, rubber		2
11	M011985	Washer, flat	Φ20xΦ10.5x1.0t	2
12	M012019	Screw, socket head	3/8"-16UNC x 4-1/2"L (114mm)	2
13	M012025	Cushion		1