

EL-14

Pec Fly / Rear Deltoid

SERVICE PARTS LIST

Upholstery color / Part No.

Upholstery	● Black	● Brown
Seat pad	**M012525**	**M012001**
Back pad w/backing	**M012536**	**M012314**

Key parts / Part No.

Item	Part No.	Spec
Cable	**S010375**	
Weight stack label	**M011960**	V1, 240LB
Weight stack label	**S010600**	V3, 240LB (2024/08~)

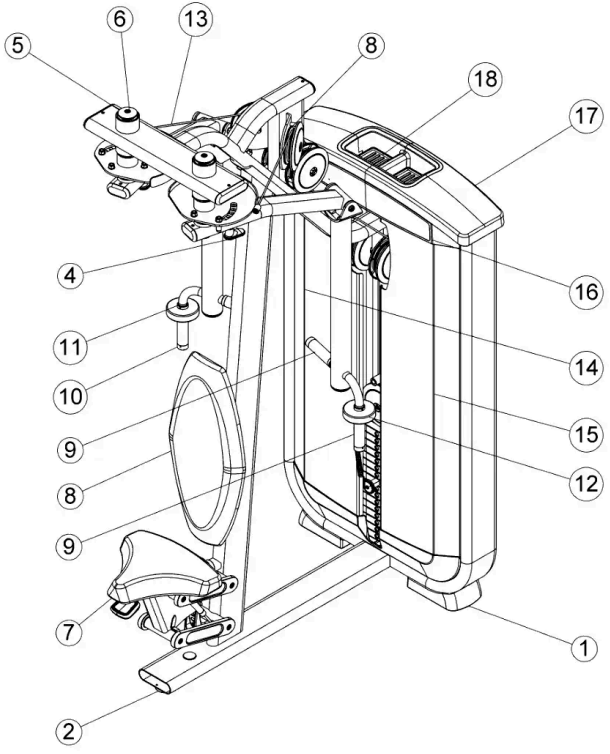

No.	Part No.	Description	Spec	Qty
1	M011995	Foot, tower	139.8Wx207.4Lx62.3h	2
2	M012011	Foot Plate	Φ70x43.5L	1
3	M012038	Pulley	ODΦ113.5xIDΦ3/8"	6
4	S010331	Adjustment lock pin		1
5	M011954	Cap, AL end 6205z bearing housing	OD60xID10X8.87	2
6	M012019	Screw, socket head	3/8"-16UNC x 4-1/2"L (114mm)	2
7	M012525	Pad, seat ● **Black**	309Wx364Lx65h	1
7	M012001	Pad, seat ● **Brown**	309Wx364Lx65h	1
8	M012536	Pad, back w/backing ● **Black**	316.9Wx680.6Lx55.8h	1
8	M012314	Pad, back w/backing ● **Brown**	316.9Wx680.6Lx55.8h	1
9	M012228	Grip, 25.1IDX4mm wall	IDΦ25.1x4.0tx110L	2
10	M012045	AL cap, 31.8OD	Φ33.1xΦ25.9x20.2h	2
11	M012044	AL ring, 31.8OD	Φ33.1xΦ26.2x10.7h	2
12	M012315	Cushion, rubber		1
13	S010375	Cable, EL14		1
14	M012316	Shroud, tower front (L)		1
15	M012317	Shroud, tower front (R)		1
16	M012205	BC placard		2
17	M012008	Tower, cap		1
18	M012009	Tray, tower cap - large		2

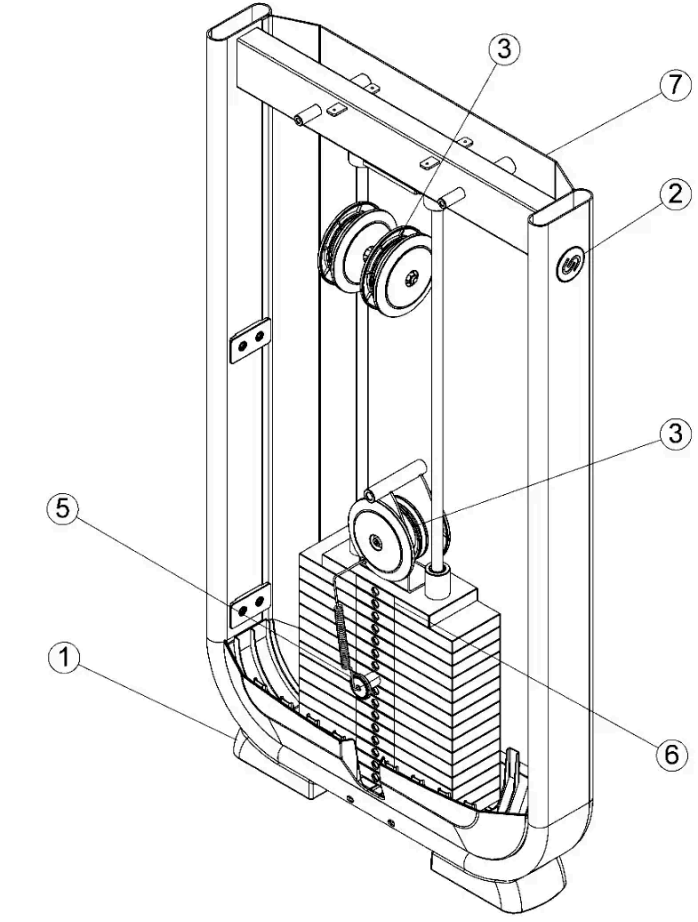

No.	Part No.	Description	Spec	Qty
1	M011995	Foot, tower	139.8Wx207.4Lx62.3h	2
2	S007957	Assy, decal	OD65x0.5t	1
3	M012038	Pulley	ODΦ113.5xIDΦ3/8"	1
5	M011989	Pin, head plate		1
6	M011960	Label, weight stack 240lbs	V1, 240LB	1
6	S010600	Label, weight stack 240lbs	V3, 240LB (2024/08~)	1
7	M012016	Rear shroud		1

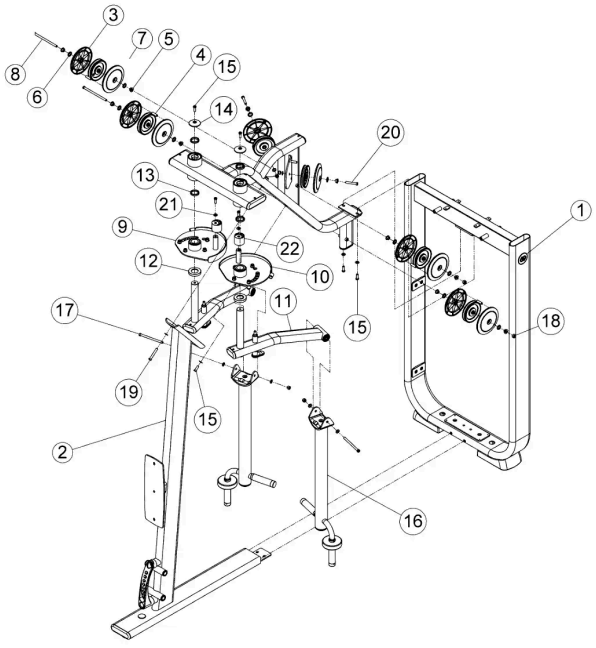

No.	Part No.	Description	Spec	Qty
1	S007957	Assy, decal	OD65x0.5t	1
2	S010376	Main assy		1
3	M012049	Pulley cap	ODΦ152xIDΦ16.5x16h	10
4	M012318	Shaft		
5	M012319	Flanged sleeve		10
6	M012320	Rubber spacer		10
6	M012320	Rubber spacer		10
7	M012038	Pulley	ODΦ113.5xIDΦ3/8"	6
8	M011980	Screw, socket head	3/8"-16UNC x 6-1/4"L (159mm)	4
9	S010377	Adjustment plate assy		1
10	S010378	Adjustment plate assy		1
11	S010379	Frame assy		2
12	M011955	SPACER, PIVOT ARM	OD63.5xID35.1x12	2
13	M011978	SPACER, 35 ID X 45 OD X 8		4
14	M011954	Cap, AL end 6205z bearing housing	OD60xID10X8.87	2
15	M012019	Screw, socket head	3/8"-16UNC x 4-1/2"L (114mm)	7
16	S010380	Handle assy		2
17	M012321	Screw, socket head	3/8"-16UNC x 5-1/4"L (133mm)	2
18	M011986	Nut, nylon	3/8"-16UNC x 11t	2
19	M012322	Screw, socket head	3/8"-16UNC x 2-1/2"L (64mm)	1
20	M012323	Screw, socket head	3/8"-16UNC x 2-1/4"L	2
21	M012027	Washer, flat	Φ16xΦ6.5x1.0t	12
22	M012324	Foot Plate		2

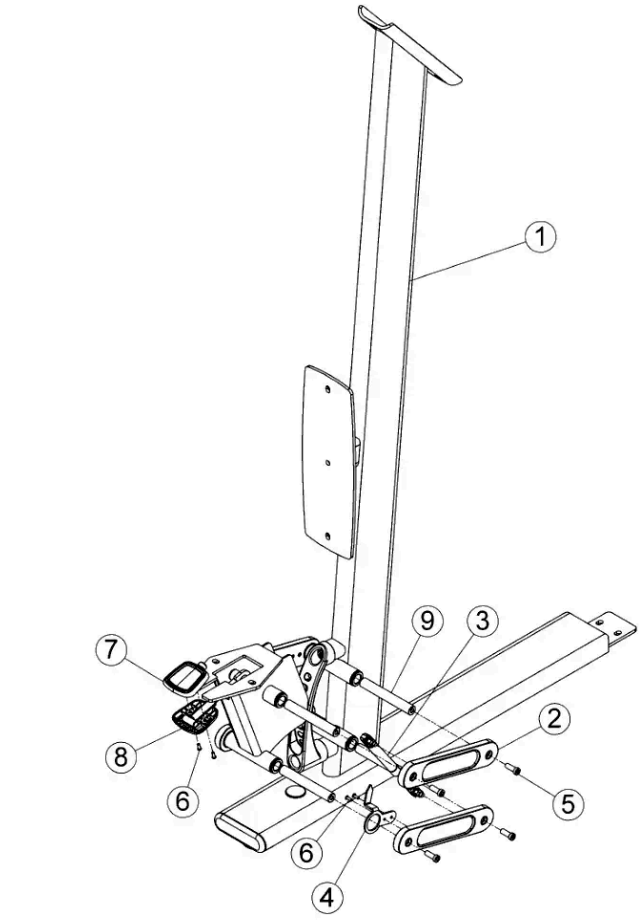

No.	Part No.	Description	Spec	Qty
1	S010381	Upright tube assy		1
2	M012030	Link, 4-bar seat w/overmold		4
3	M011957	Gas cylinder	L=226mm,STROKE=58	2
4	M012043	Indicator		1
5	M012019	Screw, socket head	3/8"-16UNC x 4-1/2"L (114mm)	8
6	M012012	Screw	#10-32UNF x 1/2"L	4
7	M012033	Cover, handle, upper		1
8	M012032	Cover, handle, lower		1
9	M012029	Shaft		2