

ZL-02

SERVICE PARTS LIST

Upholstery color / Part No.

Upholstery	Black	Brown
Back pad	M013085	M012765
Seat pad	020180010564	020180010564

Left and right upright frames are different. Both sides are assembled the same way and use the same parts (qty per side).

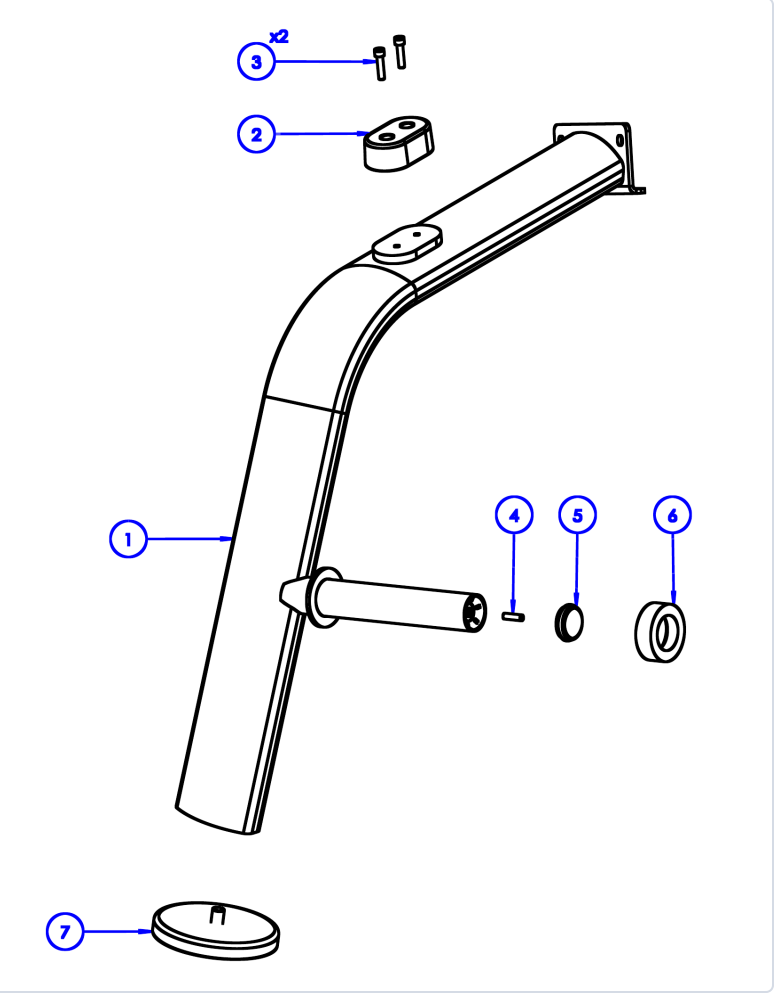

No.	Part No.	Description	Spec	Qty
1	ZL-02-030	Upright frame, L		1
1	ZL-02-027	Upright frame, R		1
2	M012825	Bumper pad	109.9×64.9×37	1
3	M012945	Socket head cap screw	M8×35	2
4	M012947	Set screw	M8×30	1
5	M012946	Weight horn end cap	Φ49.5×Φ44×17×M8	1
6	M012100	Rubber bumper ring	Φ78×Φ48×25	1
7	M012064	Leveling foot	Φ170×M16×23.5	1

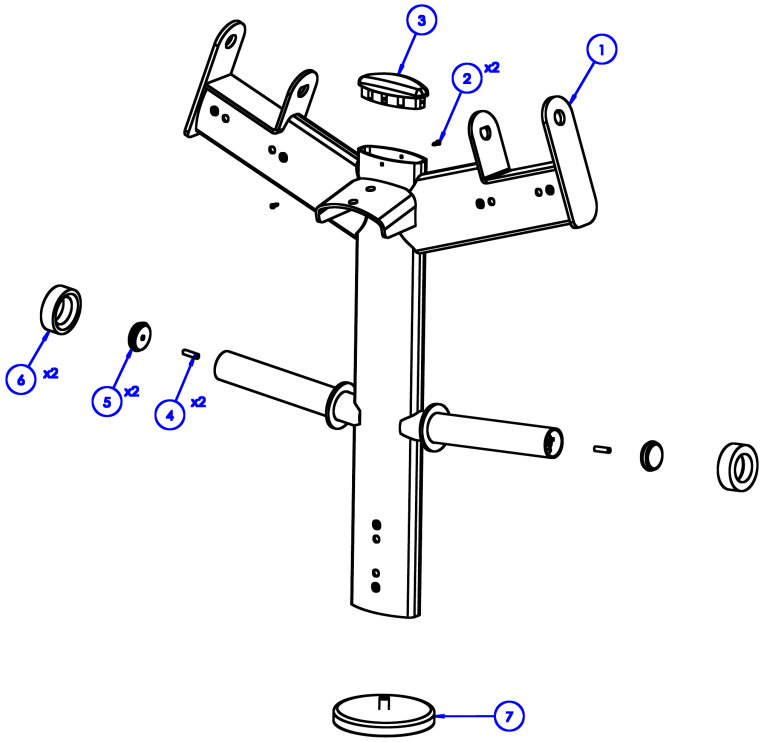

No.	Part No.	Description	Spec	Qty
1	ZL-02-011	Support frame		1
2	M012933	Phillips pan head tapping screw	M4×15	2
3	M012822	Tube end plug	58×130×3 tube	1
4	M012947	Set screw	M8×30	2
5	M012946	Weight horn end cap	Φ49.5×Φ44×17×M8	2
6	M012100	Rubber bumper ring	Φ78×Φ48×25	2
7	M012064	Leveling foot	Φ170×M16×23.5	1

Left and right press arms are different. Both sides are assembled the same way and use the same parts (qty per side).

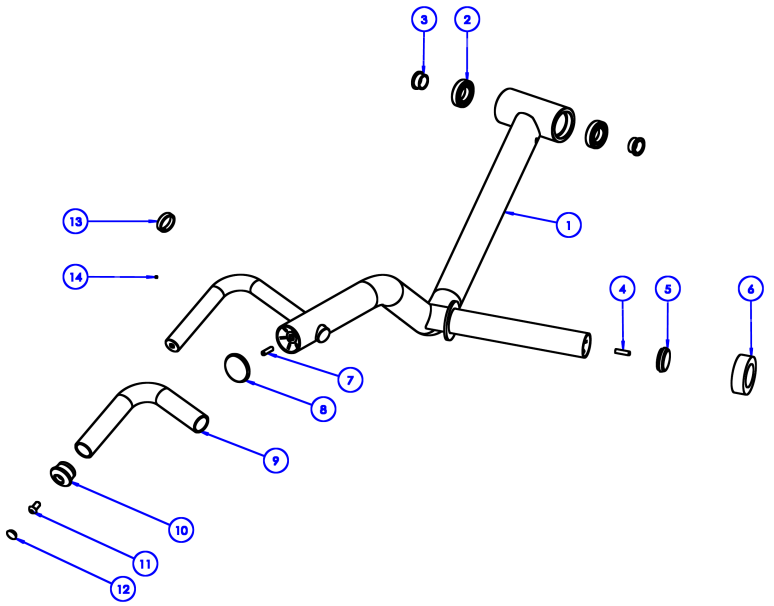

No.	Part No.	Description	Spec	Qty
1	ZL-02-034	Press arm, L		1
1	ZL-02-032	Press arm, R		1
2	M012840	Ball bearing	6006-2Z	2
3	ZL-02-110	Flange bushing	Φ36×Φ30×Φ25×16	2
4	M012947	Set screw	M8×30	1
5	M012946	Weight horn end cap	Φ49.5×Φ44×17×M8	1
6	M012100	Rubber bumper ring	Φ78×Φ48×25	1
7	M012947	Set screw	M8×30	1
8	M013077	End cap	Φ60×Φ54×17×M8	1
9	M012842	Handle grip	Φ32×414	1
10	M012096	Handle end cap	Φ48×Φ39×Φ28.8×33	1
11	M013080	Button head socket screw	M10×20	1
12	M012105	Decorative cap	Φ21.5×Φ18.5×6.3	1
13	M012103	Aluminum ring	Φ39×Φ32.5×10	1
14	M013081	Set screw	M4×3	1

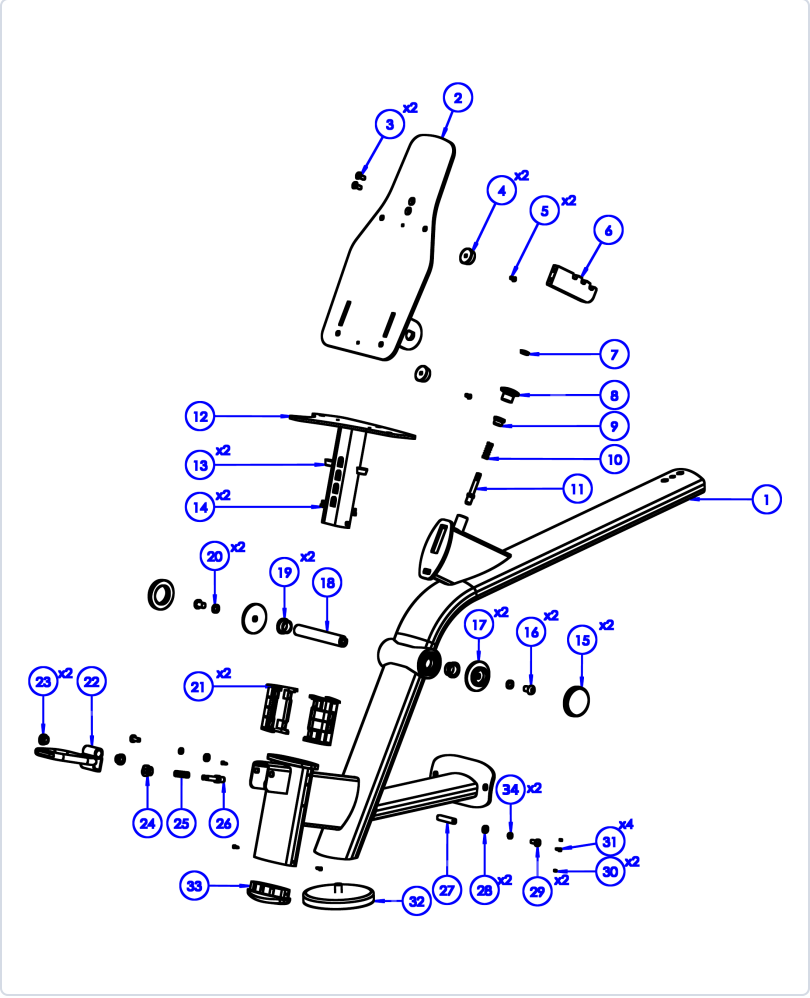

No.	Part No.	Qty
1	ZL-02-13	1
2	ZL-02-021	1
3	M013103	2
4	M012110	2
5	M012834	2
6	M012835	1
7	M012108	1
8	M012102	1
9	M012092	1
10	M012093	1
11	M012837	1
12	ZL-02-18	1
13	M012839	2
14	M012940	2
15	M012769	2
16	M012768	2
17	M012767	2

No.	Part No.	Qty
18	ZL-02-109-V1	1
19	ZL-02-110	2
20	M012943	2
21	M012827	2
22	S010796	1
23	M012095	2
24	M012092	1
25	M012173	1
26	M012829	1
27	ZL-02-122	1
28	M012937	2
29	M012939	2
30	M013081	2
31	M012933	4
32	M012064	1
33	M012822	1
34	M012938	2

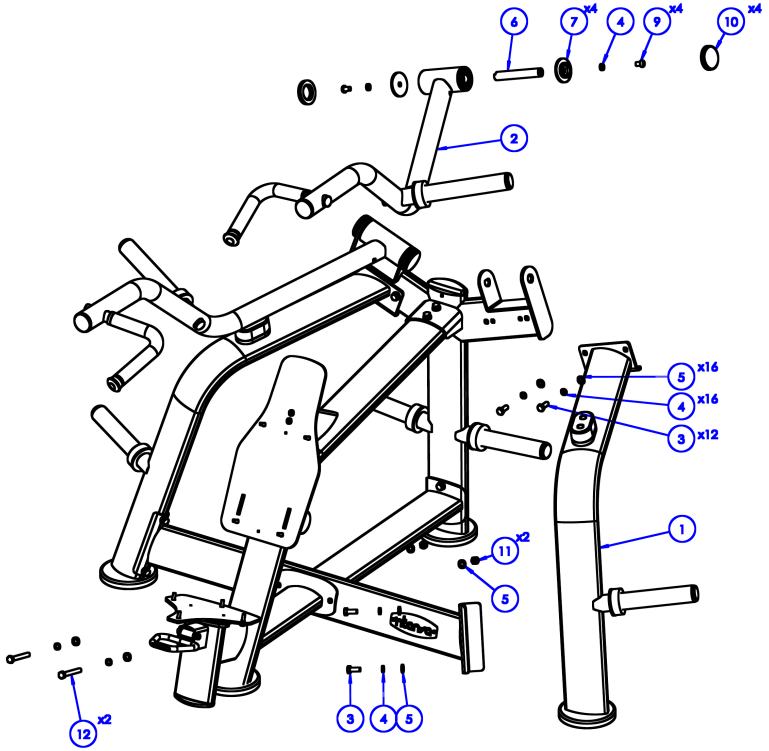

No.	Part No.	Description	Spec	Qty
1		Upright frame	See Upright Frame page	2
2		Press arm	See Press Arm page	2
3	M012942	Hex bolt	M12×30	12
4	M012943	Spring lock washer	M12	16
5	M012944	Flat washer	M12	16
6	ZL-02-109-V1	Pivot shaft	Φ25×170	2
7	M012767	Bearing retainer	Φ72×Φ35×15×M45	4
9	M012768	Button head socket screw	M12×20	4
10	M012769	Pivot end cap	Φ72×17×M45	4
11	M013082	Nylon lock nut	M12	2
12	M012761	Hex bolt	M12×95	2

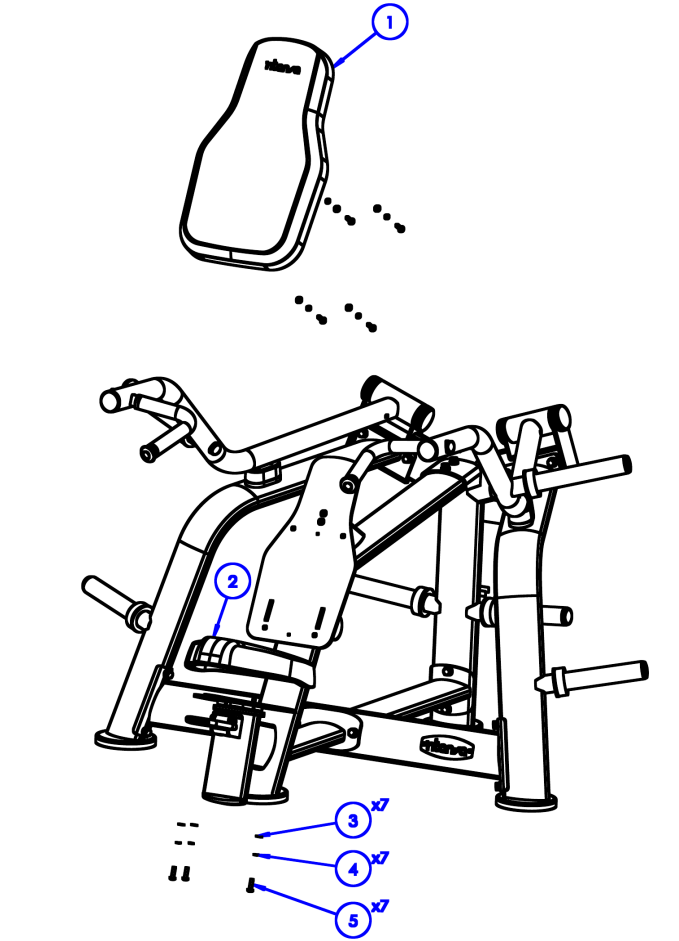

No.	Part No.	Description	Spec	Qty
1	M013085	Back pad ● Black	266×400×379.1×667.7×75.9	1
1	M012765	Back pad ● Brown	266×400×379.1×667.7×75.9	1
2	020180010564	Seat pad ● Black	112.5×379.4×374.5×93.9	1
2	020180010564	Seat pad ● Brown	112.5×379.4×374.5×93.9	1
3	M012937	Flat washer	M8	7
4	M012938	Spring lock washer	M8	7
5	M012935	Phillips truss head screw	M8×30	7

Not shown in drawings

No.	Part No.	Description	Spec	Qty
-	ZL-02-026	Connecting frame	L1230	1
-	M012840	Ball bearing (main frame pivot)	6006-2Z	2
-	M012948	Star nut (for end cap Φ49.5)	M8×Φ46	6
-	M013076	Star nut (for end cap Φ60)	M8×Φ56	2
-	O008766	Logo decal	149.5×59.7×4.5×0.5	1
-	O008769	Exercise instruction decal	230×65	1
-	020130030283	Warning decal	46×108	1
-	020130030284	Pinch point warning decal	50.8×73.2	3
-	020130040216	Maintenance decal	45×85	1