

ZL-03

SERVICE PARTS LIST

Upholstery color / Part No.

Upholstery	Black	Brown
Back pad	020180010564	020180010564
Seat pad	020180010564	020180010564

Left and right press arms are different. Both sides are assembled the same way and use the same parts (qty per side).

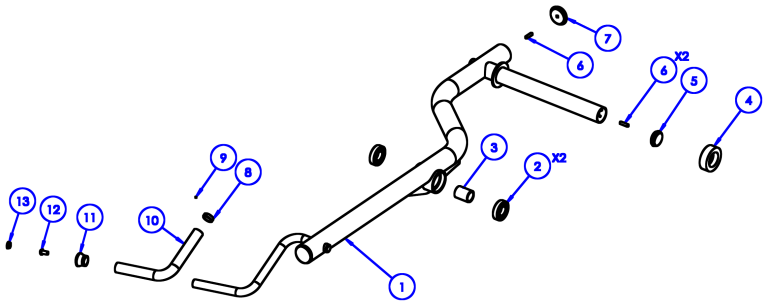

No.	Part No.	Description	Spec	Qty
1	ZL-03-023	Press arm, L		1
1	ZL-03-033	Press arm, R		1
2	M012076	Ball bearing	6005-2Z	2
3	M013114	Spacer	Φ32×Φ25.1×56.1	1
4	M012100	Rubber bumper ring	Φ78×Φ48×25	1
5	M012946	Weight horn end cap	Φ49.5×Φ44×17×M8	1
6	M012947	Set screw	M8×30	3
7	M013077	End cap	Φ60×Φ54×17×M8	1
8	M012169	Aluminum ring	Φ32×Φ26×10	1
9	M013081	Set screw	M4×3	1
10	M013113	Handle foam grip	Φ25×Φ31×(75.5+270.5+188)	1
11	M012132	Handle end cap	Φ41.9×Φ32×Φ26×Φ10.5×30	1
12	M013080	Button head socket screw	M10×20	1
13	M012105	Decorative cap	Φ21.5×Φ18.5×6.3	1

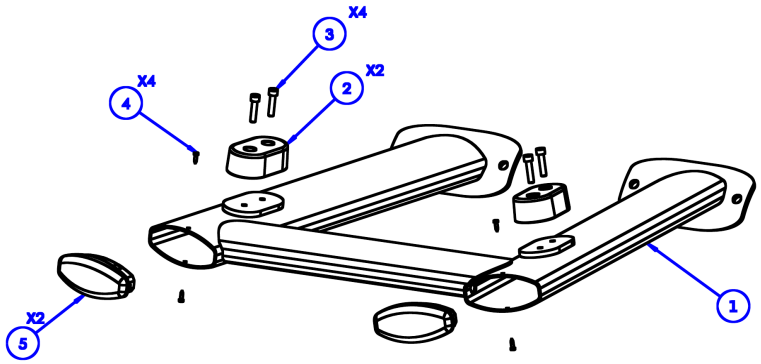

No.	Part No.	Description	Spec	Qty
1	ZL-03-035	Connecting frame		1
2	M012825	Bumper pad	109.9×64.9×37	2
3	M012945	Socket head cap screw	M8×35	4
4	M012933	Phillips pan head tapping screw	M4×15	4
5	M012822	Tube end plug	58×130×3 tube	2

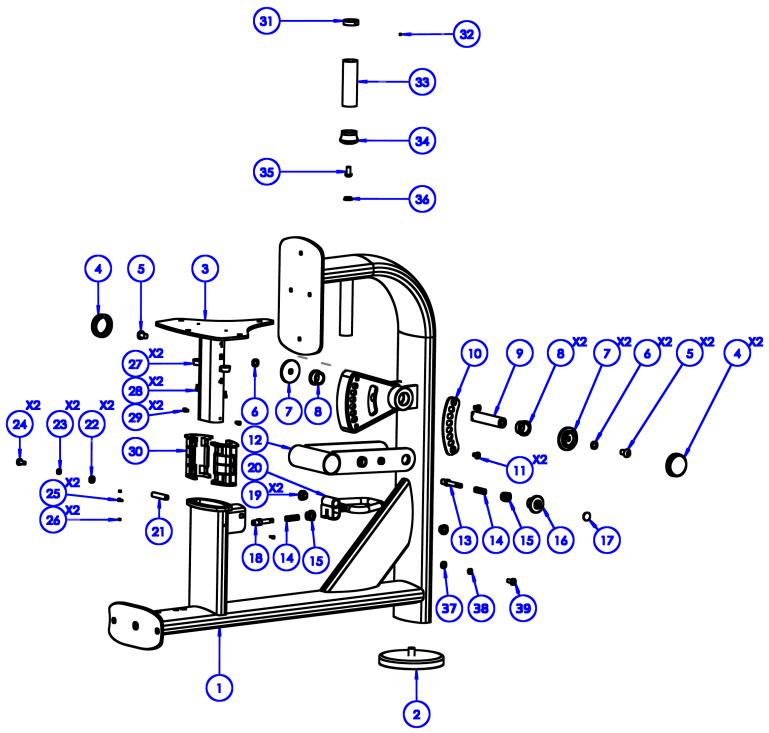

No.	Part No.	Qty
1	ZL-03-019	1
2	M012064	1
3	ZL-02-018	1
4	M013109	2
5	M012768	2
6	M012943	2
7	M013110	2
8	M012167	2
9	M013111	1
10	ZL-09-072	1
11	M013104	2
12	ZL-03-092	1
13	M012837	1
14	M012093	2
15	M012092	2
16	M012102	1
17	M012108	1
18	M012837	1
19	M012095	2
20	S010796	1

No.	Part No.	Qty
21	ZL-02-122	1
22	M012937	2
23	M012938	2
24	M012939	2
25	M012933	2
26	M012941	2
27	M012839	2
28	M012940	2
29	M012940	2
30	M012827	2
31	M012103	1
32	M013081	1
33	M012179	1
34	M012096	1
35	M013080	1
36	M012105	1
37	M012944	2
38	M012943	2
39	M012942	2

Two weight horns per machine (qty per weight horn).

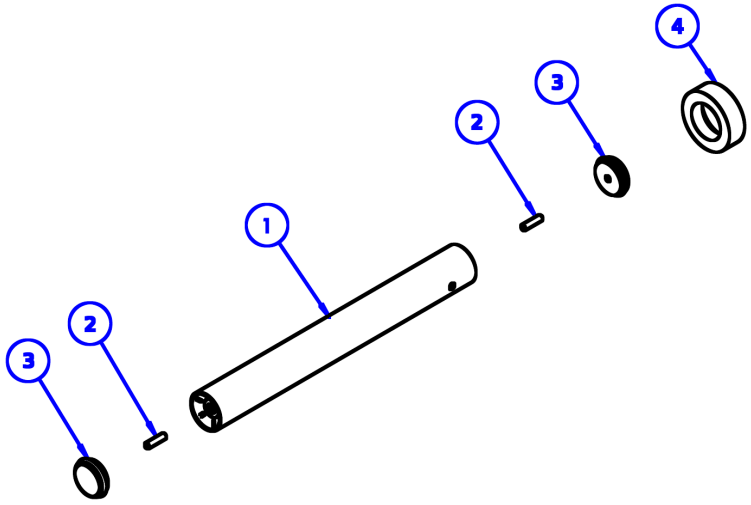

No.	Part No.	Description	Spec	Qty
1	ZL-10-151	Weight horn tube	L423.5	1
2	M012947	Set screw	M8×30	2
3	M012946	Weight horn end cap	Φ49.5×Φ44×17×M8	2
4	M012100	Rubber bumper ring	Φ78×Φ48×25	1

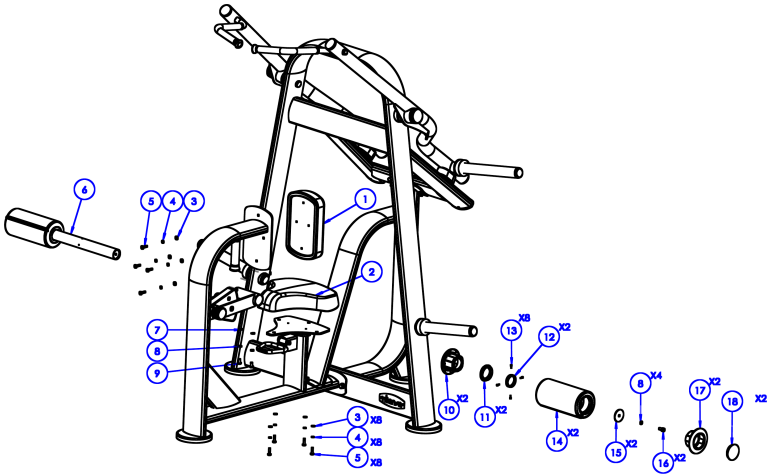

No.	Part No.	Description	Spec	Qty
1	020180010564	Back pad ● Black	112.5×379.4×374.5×93.9	1
1	020180010564	Back pad ● Brown	112.5×379.4×374.5×93.9	1
2	020180010564	Seat pad ● Black	112.5×379.4×374.5×93.9	1
2	020180010564	Seat pad ● Brown	112.5×379.4×374.5×93.9	1
3	M012937	Flat washer	M8	8
4	M012938	Spring lock washer	M8	8
5	M012935	Phillips truss head screw	M8×30	8
6	ZL-06-029	Foam roller frame		2
7	M013118	Saddle washer	M10	2
8	M013116	Spring lock washer	M10	4
9	M013080	Button head socket screw	M10×20	2
10	M013119	Cover cap	Φ78.1×Φ69.8×Φ54×12.8	2
11		Ring		2
12	M013120	Retaining ring	Φ60×Φ51×10	2
13	M013121	Socket head cap screw	M4×12	8
14	020180100020	Foam roller	Φ130×Φ51×265	2
15	M013122	Large washer	Φ10×Φ60×3	2
16	M013123	Socket head cap screw	M10×20	2
17	M012143	Foam roller sleeve	Φ125×Φ73×Φ51.9×53.6	2
18	M012142	Foam roller end cap	Φ78×Φ69.8×14	2

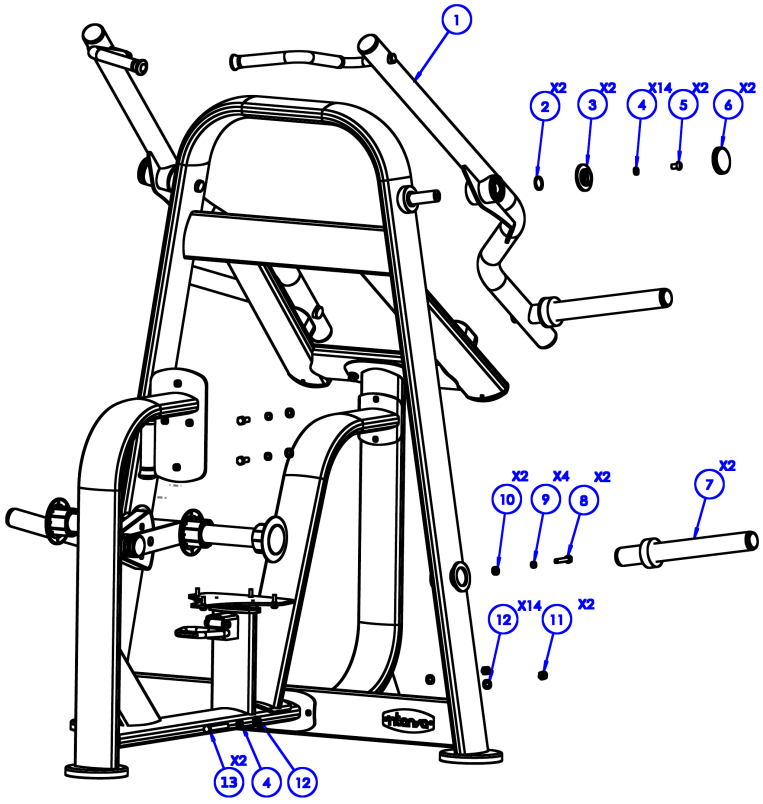

No.	Part No.	Description	Spec	Qty
1		Press arm	See Press Arm page	2
2	M012172	Retaining ring	Φ31.5×Φ25.3×3	2
3	M013110	Bearing retainer	Φ60×Φ35×15×M45	2
4	M012943	Spring lock washer	M12	14
5	M012768	Button head socket screw	M12×20	2
6	M013109	Pivot end cap	Φ60×17×M45	2
7		Weight horn	See Weight Horn page	2
8	M013117	Hex bolt	M10×20	2
9	M013116	Spring lock washer	M10	4
10	M013115	Flat washer	M10	2
11	M013082	Nylon lock nut	M12	2
12	M012944	Flat washer	M12	14
13	M012761	Hex bolt	M12×95	2

Not shown in drawings

No.	Part No.	Description	Spec	Qty
-	ZL-03-034	Upright frame		1
-	ZL-03-021	Support frame		1
-	M012064	Leveling foot	Φ170×M16×23.5	3
-	M012942	Hex bolt	M12×30	10
-	M012948	Star nut (for end cap Φ49.5)	M8×Φ46	6
-	M013076	Star nut (for end cap Φ60)	M8×Φ56	4
-	M013106	Anti-scratch plate	39.3×147.7×4	1
-	M013107	Socket head cap screw	M8×40	1
-	M013108	Spacer	Φ20×Φ8.3×30	1
-	O008766	Logo decal	149.5×59.7×4.5×0.5	1
-	O008770	Exercise instruction decal	230×65	1
-	020130030283	Warning decal	46×108	1
-	020130030284	Pinch point warning decal	50.8×73.2	3
-	020130040216	Maintenance decal	45×85	1