

ZL-04

SERVICE PARTS LIST

Upholstery color / Part No.

Upholstery	Black	Brown
Seat pad	020180010565	020180010565
Chest pad	020180010563	020180010563

One side shown. Left and right sides use the same parts (qty per side).

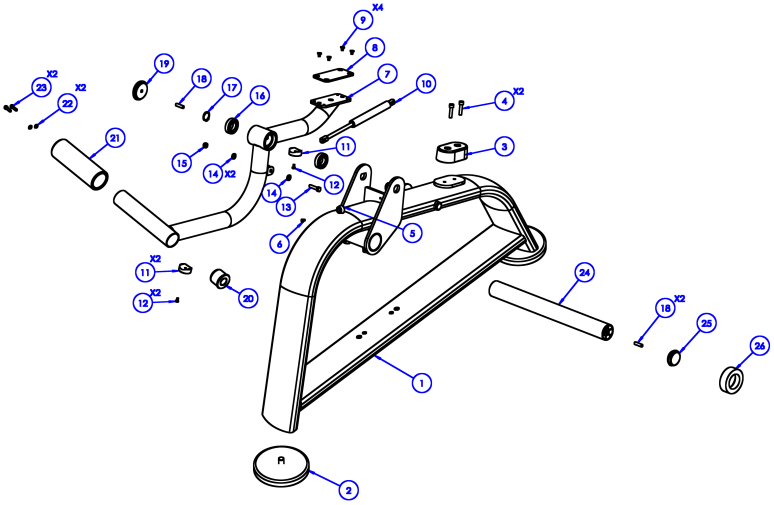

No.	Part No.	Qty
1		1
2	M012064	1
3	M012825	1
4	M012945	2
5		1
6		1
7		1
8	M013127	1
9	M013126	4
10	M013130	1
11	M013128	2
12	M013129	2
13	M013131	2

No.	Part No.	Qty
14	M012937	4
15	M013132	2
16	M012076	2
17	M012863	1
18	M012947	3
19		1
20		1
21	M013124	1
22		2
23	M013125	2
24		1
25	M012946	1
26	M012100	1

One handle shown. Left and right handles use the same parts (qty per handle).

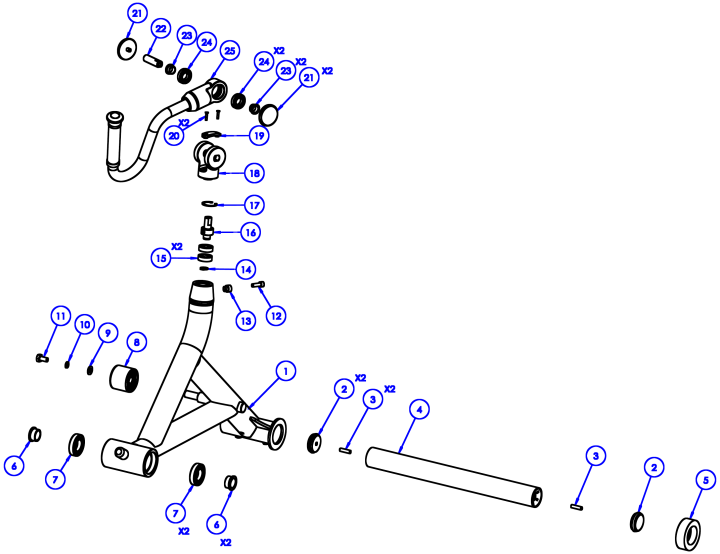

No.	Part No.	Description	Spec	Qty
1	ZL-04-047	Swing frame		1
2	M012946	Weight horn end cap	Φ49.5×Φ44×17×M8	2
3	M012947	Set screw	M8×30	2
4		Weight horn tube		1
5	M012100	Rubber bumper ring	Φ78×Φ48×25	1
6	M012826	Flange bushing	Φ36×Φ30×Φ25×16	4
7	M012840	Ball bearing	6006-2Z	4
8	M012168	Roller	Φ60×Φ40×Φ32.5×50	1
9	M013115	Flat washer	M10	1
10	M013116	Spring lock washer	M10	1
11	M013117	Hex bolt	M10×20	1
12	M013198	Socket head cap screw	M6×30	1
13		Spacer		1
14	M013195	Shaft retaining ring	Φ17	1
15	M012177	Ball bearing	6203-2Z	2
16	ZL-04-108	Shaft	Φ17×53	1
17	M013189	Hole retaining ring	Φ35	1
18		Handle adapter		1
19	M013201	Bumper	20×50×11	1
20	M013200	Socket countersunk head screw	M4×20	2
21	M013203	End cap	Φ55×22×M8	2
22	ZL-04-112	Shaft	Φ17×60	1
23		Spacer		2
24	M013190	Ball bearing	6003-2Z	4
25	ZL-04-110	Connecting sleeve		1

Left and right handles use the same parts (qty per handle).

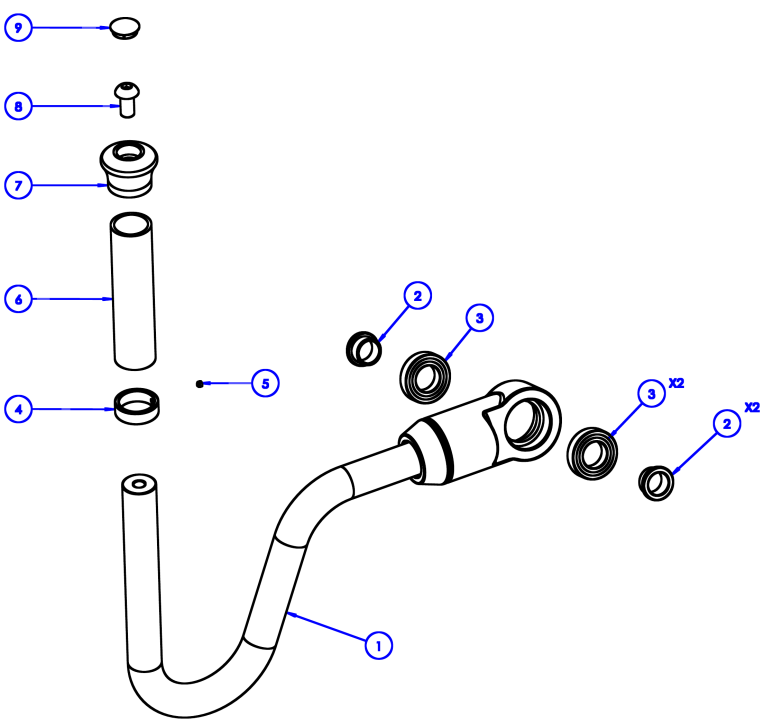

No.	Part No.	Description	Spec	Qty
1	ZL-04-040	Handle frame		1
2	M012934	Flange bushing	Φ25×Φ20×Φ17×12	2
3	M013133	Ball bearing	61904-2Z	2
4	M012169	Aluminum ring	Φ32×Φ26×10	1
5	M013081	Set screw	M4×3	1
6	M013141	Handle grip	Φ25×120	1
7	M012132	Handle end cap	Φ41.9×Φ32×Φ26×Φ10.5×30	1
8	M013080	Button head socket screw	M10×20	1
9	M012105	Decorative cap	Φ21.5×Φ18.5×6.3	1

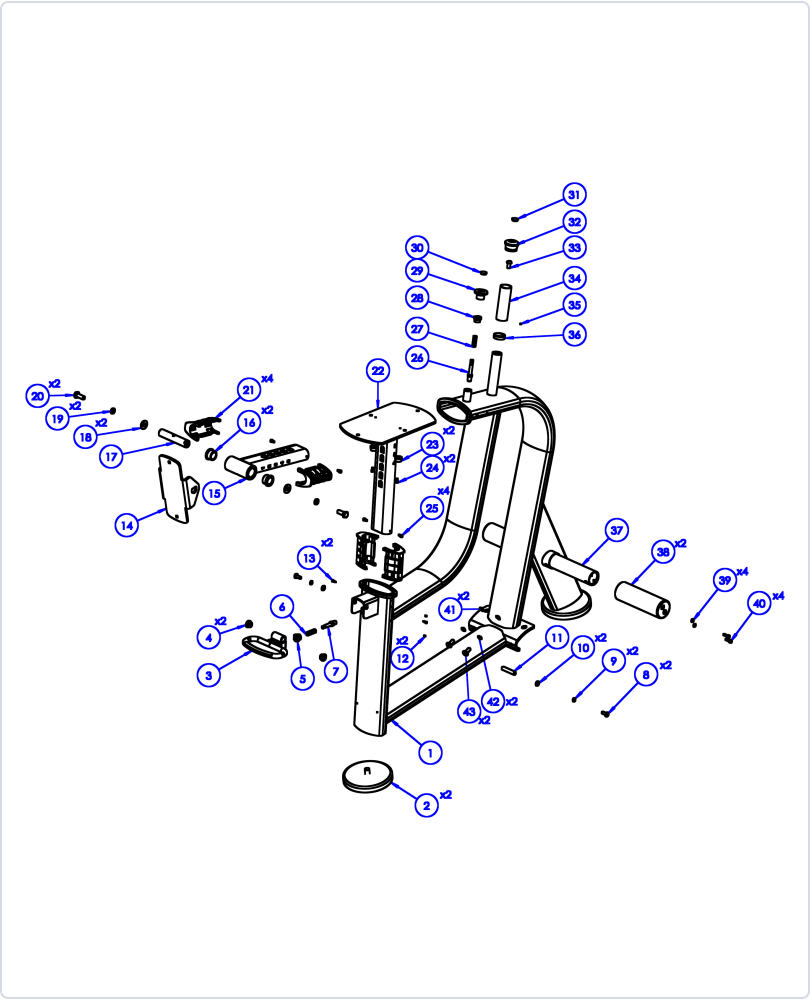

No.	Part No.	Qty
1	ZL-04-004	1
2	M012064	2
3	S011029	1
4	M012095	2
5	M012092	1
6	M012173	1
7	M012829	1
8	M012939	2
9	M012938	2
10	M012937	2
11	ZL-02-122	1
12	M012933	2
13	M012933	2
14	ZL-04-063	1
15	ZL-04-010	1
16	M012167	2
17	ZL-04-065	1
18	M012758	2
19	M012943	2
20	M012942	2
21	M012827	4
22	ZL-04-007	1

No.	Part No.	Qty
23	M012839	2
24	M012940	2
25	M012940	4
26	M012837	1
27	M012093	1
28	M012092	1
29	M012102	1
30	M012108	1
31	M012105	1
32	M012096	1
33	M013080	1
34	M012179	1
35	M013081	1
36	M012103	1
37	ZL-01-045	1
38	M013124	2
39		4
40	M013125	4
41	M013118	2
42	M013116	2
43	M013117	2

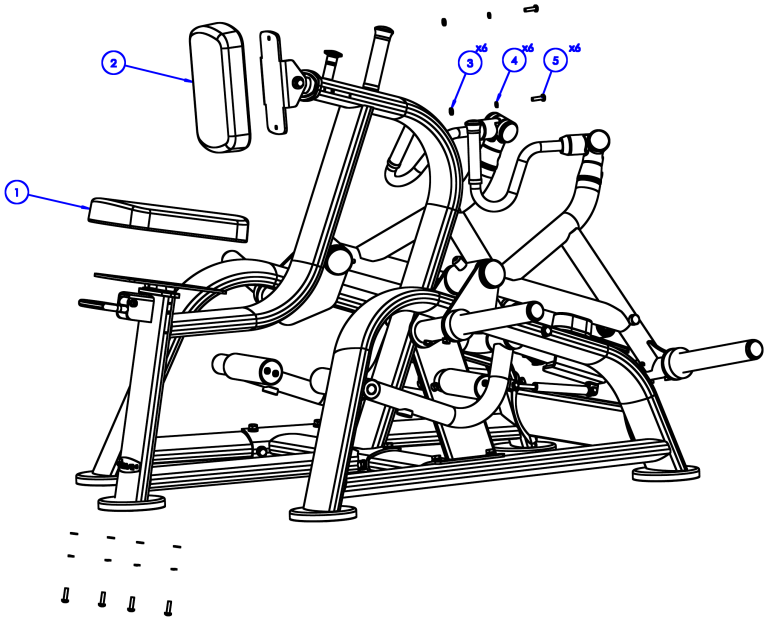

No.	Part No.	Description	Spec	Qty
1	020180010565	Seat pad ● Black	269.4×409.4×63	1
1	020180010565	Seat pad ● Brown	269.4×409.4×63	1
2	020180010563	Chest pad ● Black	329.4×199.5×65.5	1
2	020180010563	Chest pad ● Brown	329.4×199.5×65.5	1
3	M012937	Flat washer	M8	6
4	M012938	Spring lock washer	M8	6
5	M012935	Phillips truss head screw	M8×30	6

Qty per weight horn.

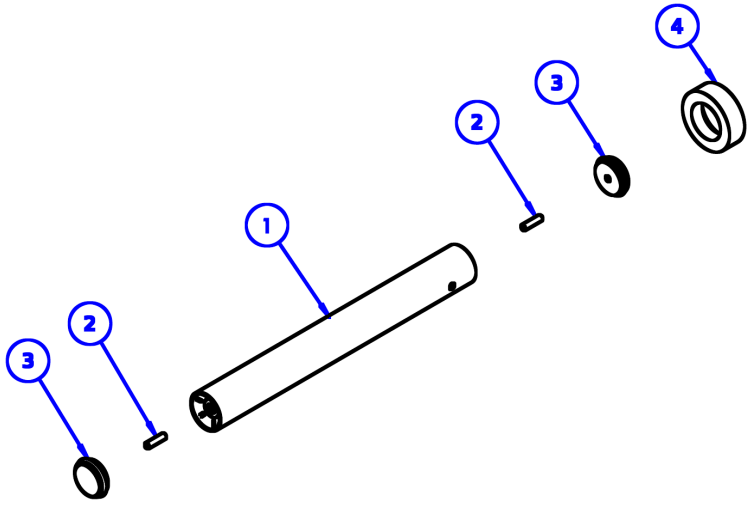

No.	Part No.	Description	Spec	Qty
1		Weight horn tube	L488 / L473	1
2	M012947	Set screw	M8×30	2
3	M012946	Weight horn end cap	Φ49.5×Φ44×17×M8	2
4	M012100	Rubber bumper ring	Φ78×Φ48×25	1

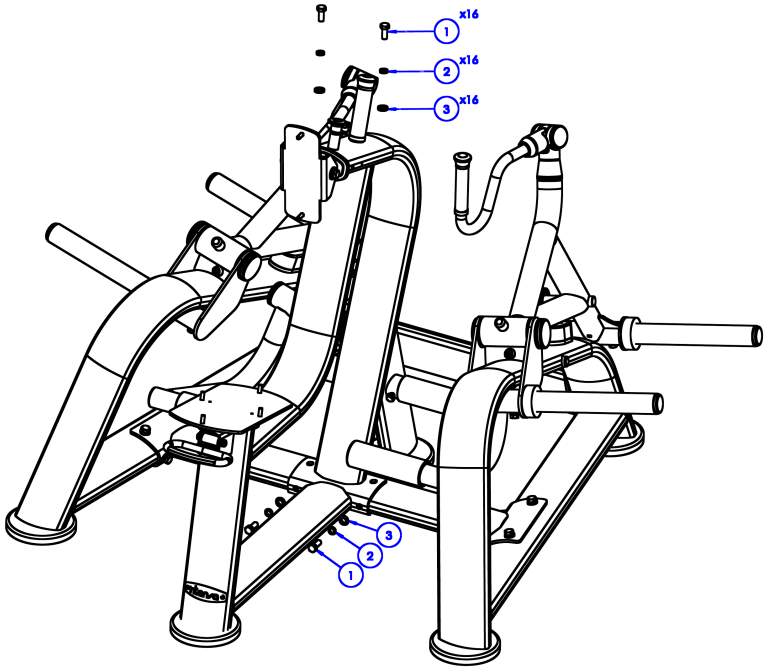

No.	Part No.	Description	Spec	Qty
1	M012942	Hex bolt	M12×30	16
2	M012943	Spring lock washer	M12	16
3	M012944	Flat washer	M12	16

Not shown in drawings

No.	Part No.	Description	Spec	Qty
-	ZL-04-019	Connecting frame, short	L810	1
-	ZL-04-018	Connecting frame, long	L886.8	1
-		Pivot shaft (upright)	Φ25×146	2
-	M012767	Bearing retainer	Φ72×Φ35×15×M45	4
-	M012769	Pivot end cap	Φ72×17×M45	4
-	M012768	Button head socket screw	M12×20	4
-	M012943	Spring lock washer	M12	4
-	M012104	Tube end plug	Φ49.5×Φ45.5×Φ22×35×38.5	2
-	M012948	Star nut (for end cap Φ49.5)	M8×Φ46	6
-	M013192	Large flat washer	M8 (Φ25×Φ8.5×2.5)	2
-	M013193	Socket head cap screw	M8×12	4
-	M013199	Large flat washer	Φ19.5×2	2
-	M013143	Socket head cap screw	M8×20	1
-	O008766	Logo decal	149.5×59.7	1
-	O008771	Exercise instruction decal	90×200	1
-	020130030283	Warning decal	46×108	1
-	020130030284	Pinch point warning decal	50.8×73.2	3
-	020130040216	Maintenance decal	45×85	1