

ZL-05

SERVICE PARTS LIST

Upholstery color / Part No.

Upholstery	Black	Brown
Elbow pad	020180090302	020180090302
Seat pad	020180010564	020180010564

Please quote model and Part No. when ordering.

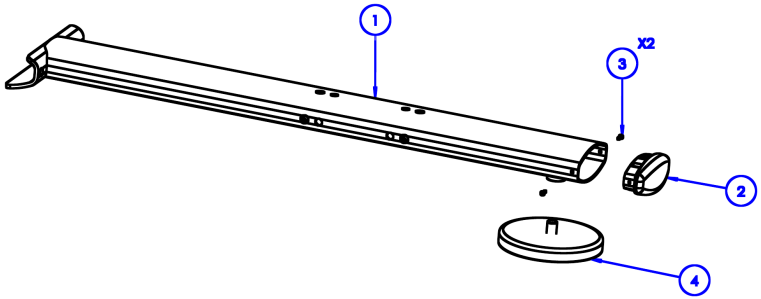

No.	Part No.	Description	Spec	Qty
1	ZL-05-004	Base frame		1
2	M012822	Tube end plug	58×130×3 tube	1
3	M012933	Phillips pan head tapping screw	M4×15	2
4	M012064	Leveling foot	Φ170×M16×23.5	1

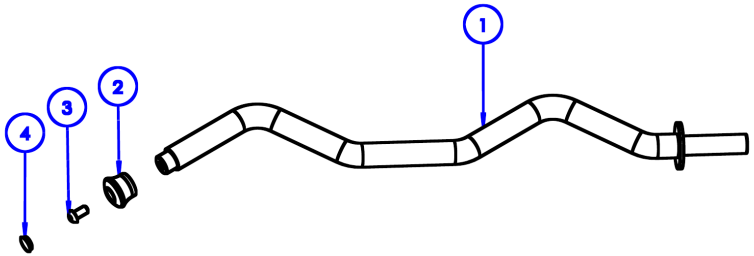

No.	Part No.	Description	Spec	Qty
1	ZL-05-015	Handle frame		1
2	M012132	Handle end cap	Φ41.9×Φ32×Φ26×Φ10.5×30	1
3	M013080	Button head socket screw	M10×20	1
4	M012105	Decorative cap	Φ21.5×Φ18.5×6.3	1

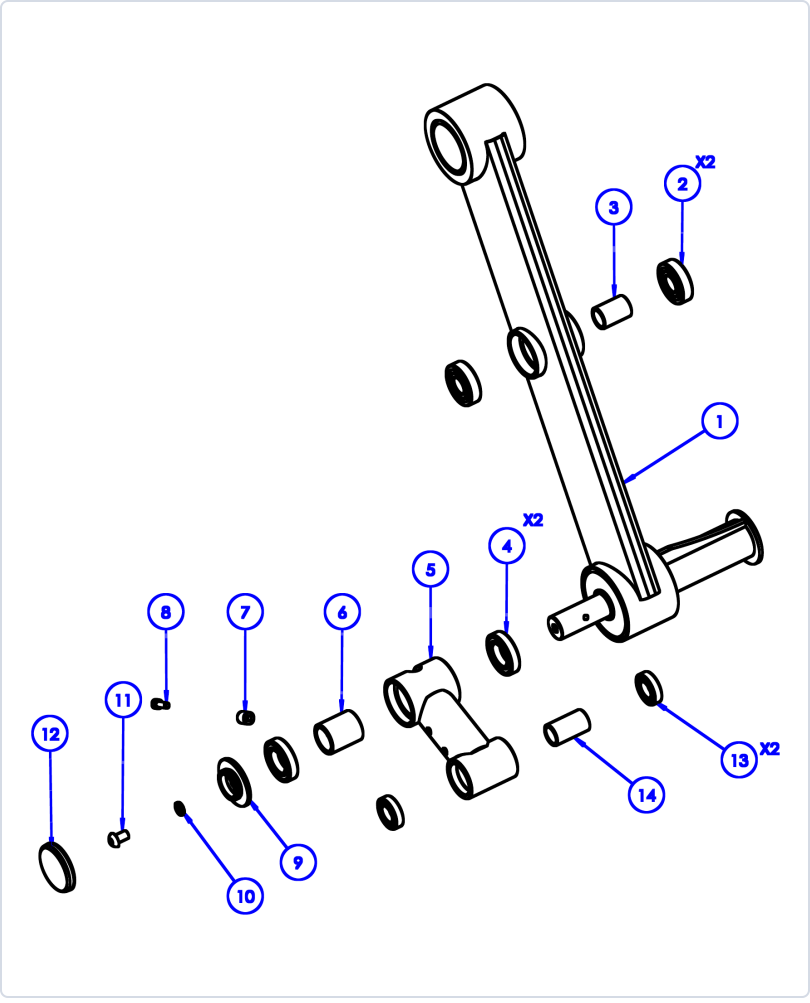

No.	Part No.	Description	Spec	Qty
1	ZL-05-010	Rotating arm		1
2	M012076	Ball bearing	6005-2Z	2
3	ZL-05-085	Spacer	Φ32×Φ25.1×56.1	1
4	M013149	Ball bearing	6007-2Z	2
5		Balance frame		1
6	ZL-05-085	Spacer	Φ32×Φ25.1×56.1	1
7	ZL-01-166	Limit sleeve	Φ17×Φ14×10	1
8	M013148	Socket head cap screw	M8×25	1
9	M012767	Bearing retainer	Φ72×Φ35×15×M45	1
10	M012943	Spring lock washer	M12	1
11	M012768	Button head socket screw	M12×20	1
12	M012769	Pivot end cap	Φ72×17×M45	1
13	M012076	Ball bearing	6005-2Z	2
14	ZL-05-085	Spacer	Φ32×Φ25.1×56.1	1

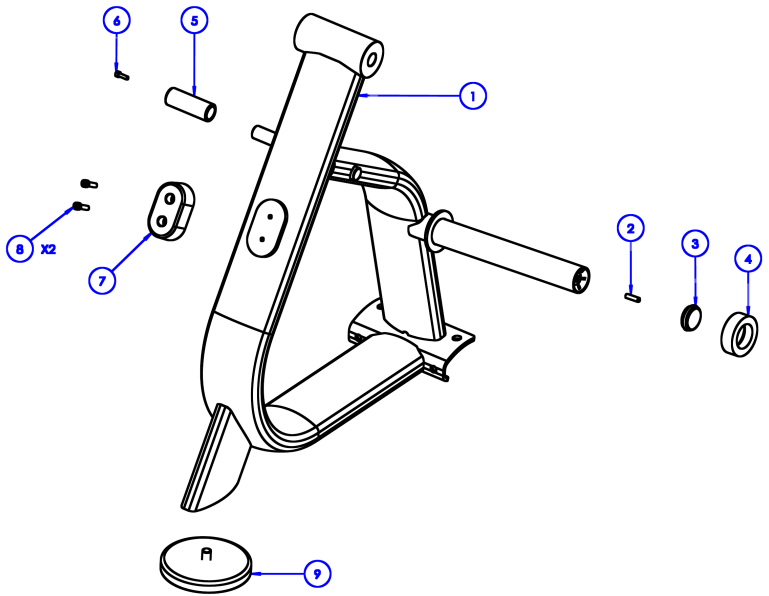

No.	Part No.	Description	Spec	Qty
1	ZL-05-007	Upright frame		1
2	M012947	Set screw	M8×30	1
3	M012946	Weight horn end cap	Φ49.5×Φ44×17×M8	1
4	M012100	Rubber bumper ring	Φ78×Φ48×25	1
5	ZL-05-078	Limit sleeve	Φ34×Φ25.5×94.8	1
6	M013125	Socket head cap screw	M6×20	1
7	M012825	Bumper pad	109.9×64.9×37	1
8	M012945	Socket head cap screw	M8×35	2
9	M012064	Leveling foot	Φ170×M16×23.5	1

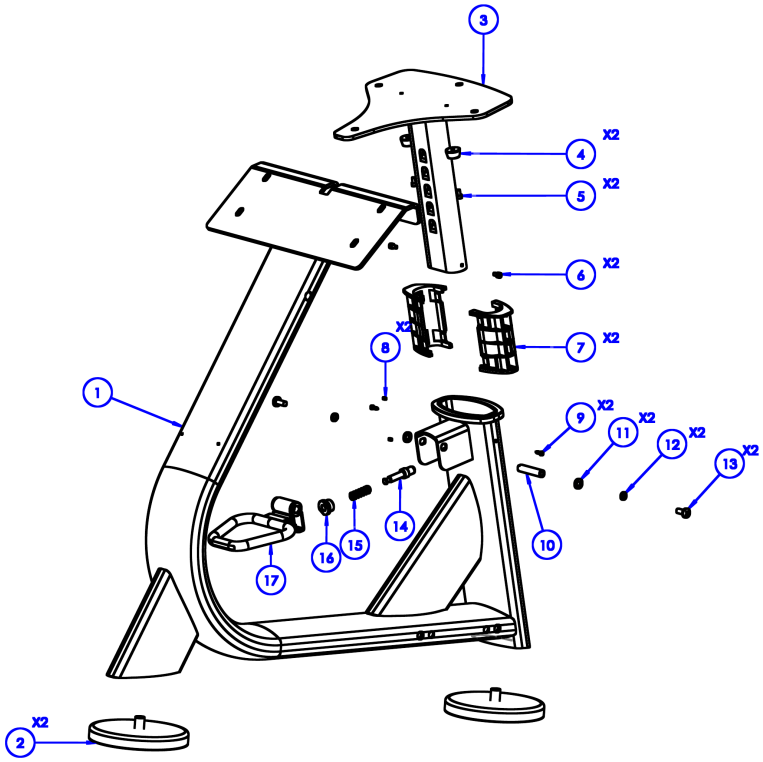

No.	Part No.	Description	Spec	Qty
1	ZL-05-024	Main frame		1
2	M012064	Leveling foot	Φ170×M16×23.5	2
3	ZL-02-055	Seat frame		1
4	M012839	Bumper	Φ20×Φ17.9×12	2
5	M012940	Socket head cap screw	M5×10	2
6	M012940	Socket head cap screw	M5×10	2
7	M012827	Seat slide sleeve	58×130×3 tube	2
8	M012941	Set screw	M4×6	2
9	M012933	Phillips pan head tapping screw	M4×15	2
10	ZL-02-122	Handle pivot shaft	Φ12×57	1
11	M012937	Flat washer	M8	2
12	M012938	Spring lock washer	M8	2
13	M012939	Phillips truss head screw	M8×20	2
14	M012829	Pop-pin plunger	Φ15.9×Φ12.5×Φ9.9×63.5	1
15	M012173	Pop-pin spring	Φ1.2×Φ10.5×38	1
16	M012092	Pop-pin nut	Φ25.4×M20×1.5×16	1
17		Seat adjustment handle		1

Qty per weight horn.

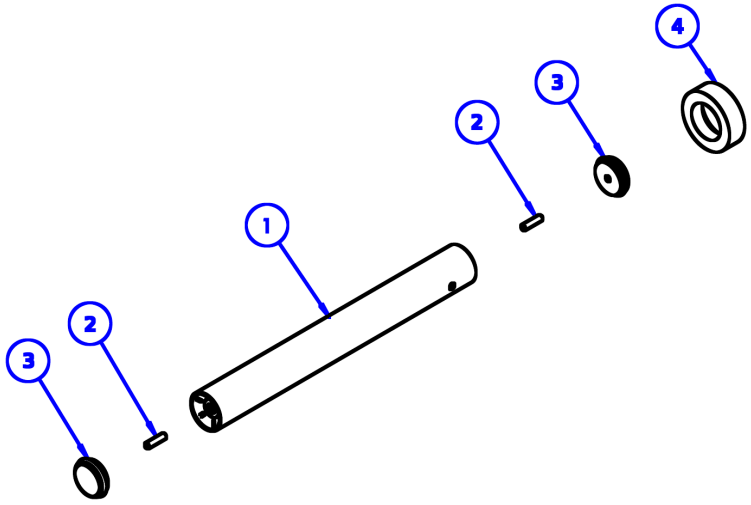

No.	Part No.	Description	Spec	Qty
1	ZL-10-027	Weight horn tube	L491	1
2	M012947	Set screw	M8×30	2
3	M012946	Weight horn end cap	Φ49.5×Φ44×17×M8	2
4	M012100	Rubber bumper ring	Φ78×Φ48×25	1

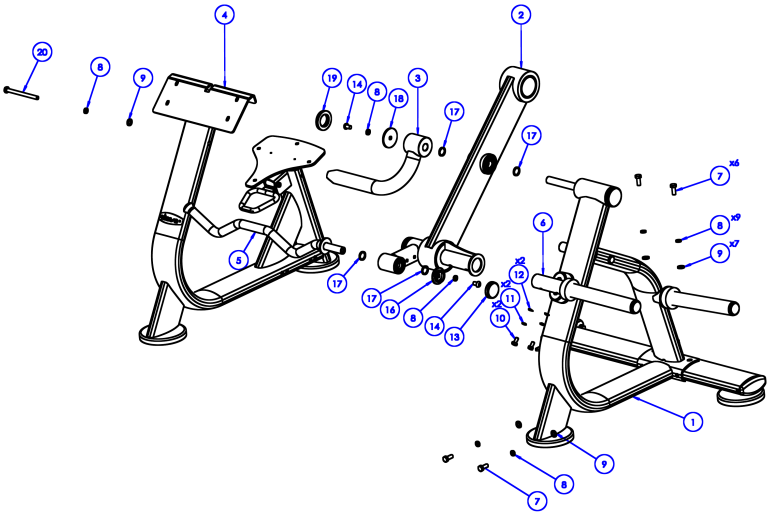

No.	Part No.	Description	Spec	Qty
1		Upright frame	See Upright Frame page	1
2		Rotating arm	See Rotating Arm page	1
3		Handle	See Handle page	1
4		Main frame	See Main Frame page	1
5		Connecting tube		1
6		Weight horn	See Weight Horn page	1
7	M012942	Hex bolt	M12×30	6
8	M012943	Spring lock washer	M12	9
9	M012944	Flat washer	M12	7
10	M013117	Hex bolt	M10×20	2
11	M013116	Spring lock washer	M10	2
12	M013118	Saddle washer	M10	2
13	M013109	Pivot end cap	Φ60×17×M45	2
14	M012768	Button head socket screw	M12×20	3
16	M013110	Bearing retainer	Φ60×Φ35×15×M45	2
17	M012172	Retaining ring	Φ31.5×Φ25.3×3	4
18	M012767	Bearing retainer	Φ72×Φ35×15×M45	1
19	M012769	Pivot end cap	Φ72×17×M45	1
20	M013153	Hex bolt	M12×150	1

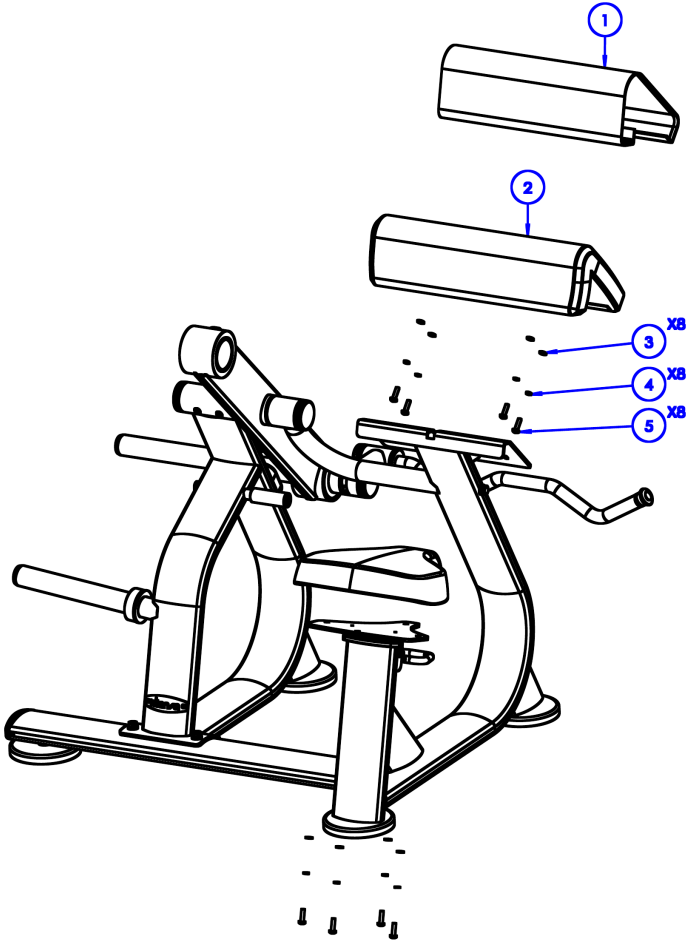

No.	Part No.	Description	Spec	Qty
1	020180090302	Elbow pad ● Black	580×(203.9+327.6)×60	1
1	020180090302	Elbow pad ● Brown	580×(203.9+327.6)×60	1
2	020180010564	Seat pad ● Black	112.5×379.4×374.5×93.9	1
2	020180010564	Seat pad ● Brown	112.5×379.4×374.5×93.9	1
3	M012937	Flat washer	M8	8
4	M012938	Spring lock washer	M8	8
5	M012935	Phillips truss head screw	M8×30	8

Not shown in drawings

No.	Part No.	Description	Spec	Qty
-	ZL-05-087	Handle foam grip	Φ25×720	1
-	ZL-05-012	Connecting frame		1
-	ZL-05-055	Pivot shaft	Φ25×340.5	1
-	M012095	Flange bushing	Φ24×Φ12×12	2
-	M013147	Retaining ring	Φ45×Φ35.5×3	2
-	M013103	Socket countersunk head screw	M8×20	2
-	M013152	Socket countersunk head screw	M8×35	2
-	M013077	End cap	Φ60×Φ54×17×M8	1
-	M012947	Set screw	M8×30	1
-	M012948	Star nut (for end cap Φ49.5)	M8×Φ46	2
-	O008767	Logo decal, small	40.6×90.9×7.8×0.5	1
-	O008772	Exercise instruction decal	90×200	1
-	020130030283	Warning decal	46×108	1
-	020130030284	Pinch point warning decal	50.8×73.2	1
-	020130040216	Maintenance decal	45×85	1