

ZL-06

SERVICE PARTS LIST

Upholstery color / Part No.

Upholstery	Black	Brown
Chest pad	**020180010563**	**020180010563**
Seat pad	**020180010565**	**020180010565**

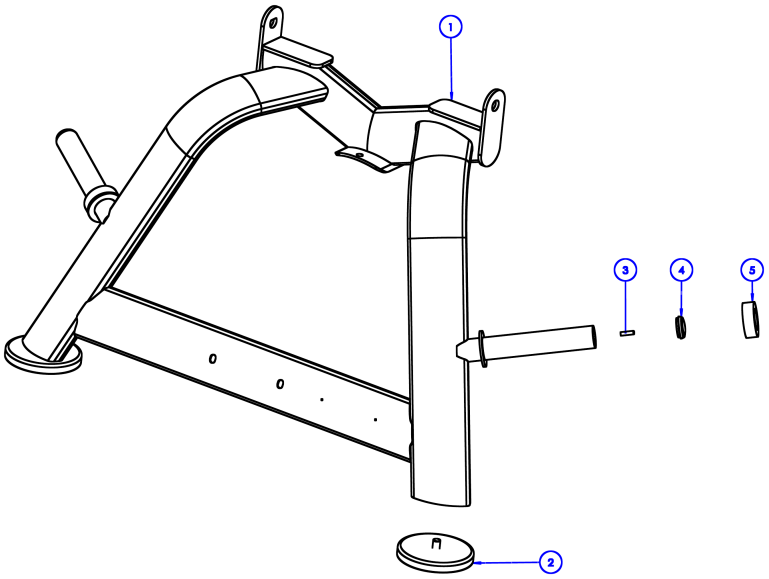

No.	Part No.	Description	Spec	Qty
1	ZL-06-019	Upright frame		1
2	M012064	Leveling foot	Φ170×M16×23.5	2
3	M012947	Set screw	M8×30	2
4	M012946	Weight horn end cap	Φ49.5×Φ44×17×M8	2
5	M012100	Rubber bumper ring	Φ78×Φ48×25	2

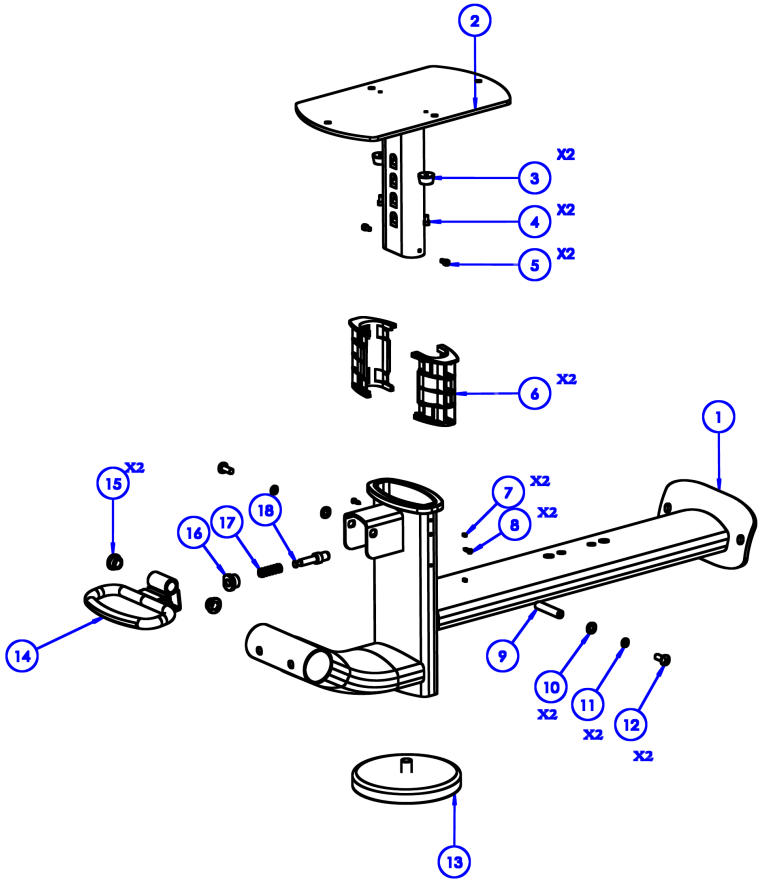

No.	Part No.	Description	Spec	Qty
1		Seat base frame		1
2		Seat frame	Slide tube L242	1
3	M012839	Bumper	Φ20×Φ17.9×12	2
4	M012940	Socket head cap screw	M5×10	2
5	M012940	Socket head cap screw	M5×10	2
6	M012827	Seat slide sleeve	58×130×3 tube	2
7	M012941	Set screw	M4×6	2
8	M012933	Phillips pan head tapping screw	M4×15	2
9	ZL-02-122	Handle pivot shaft	Φ12×57	1
10	M012937	Flat washer	M8	2
11	M012938	Spring lock washer	M8	2
12	M012939	Phillips truss head screw	M8×20	2
13	M012064	Leveling foot	Φ170×M16×23.5	1
14	S011029	Seat adjustment handle		1
15	M012095	Flange bushing	Φ24×Φ12×12	2
16	M012092	Pop-pin nut	Φ25.4×M20×1.5×16	1
17	M012173	Pop-pin spring	Φ1.2×Φ10.5×38	1
18	M012829	Pop-pin plunger	Φ15.9×Φ12.5×Φ9.9×63.5	1

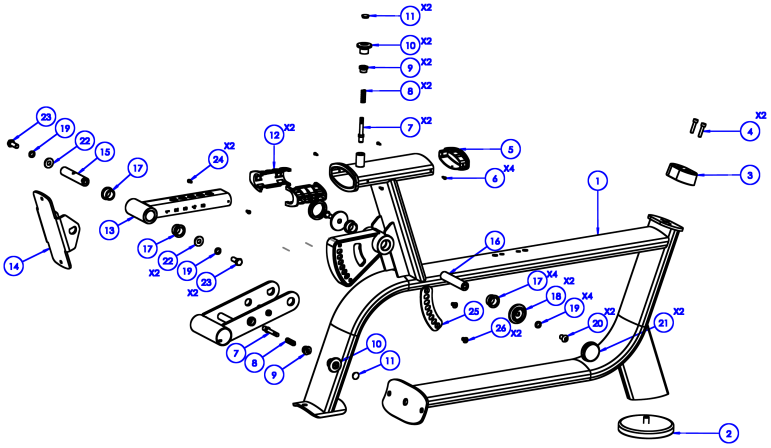

No.	Part No.	Qty
1	ZL-06-010	1
2	M012064	1
3	M012825	1
4	M012945	2
5	M012822	1
6	M012933	4
7	M012837	2
8	M012093	2
9	M012092	2
10	M012102	2
11	M012108	2
12	M012827	2
13	ZL-04-010	1

No.	Part No.	Qty
14	ZL-01-082	1
15	M013142	1
16	M013111	1
17	M012167	4
18	M013110	2
19	M012943	4
20	M012768	2
21	M013109	2
22	M012758	2
23	M012942	2
24	M012941	2
25	ZL-09-072	1
26	M013104	2

Left and right handles use the same parts (qty per handle).

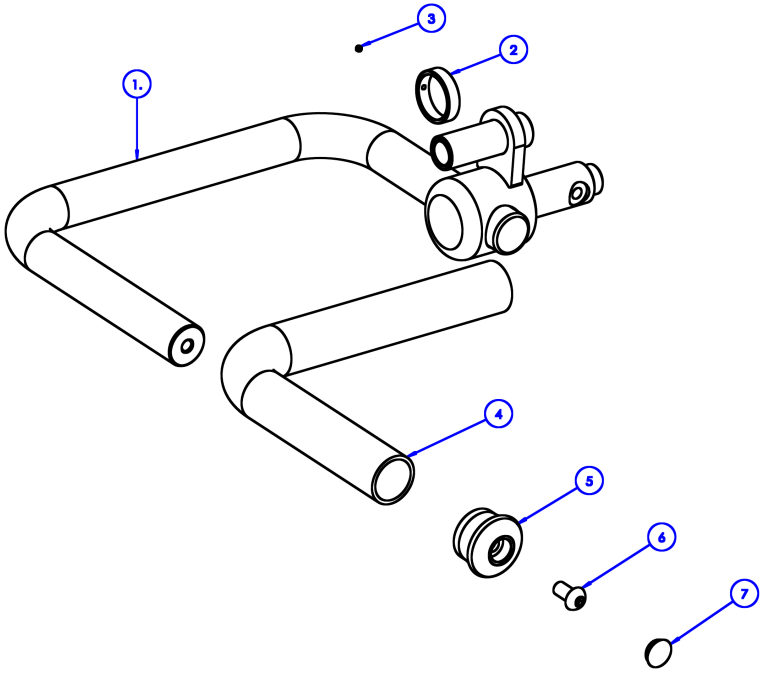

No.	Part No.	Description	Spec	Qty
1	ZL-06-024	Handle		1
2	M012103	Aluminum ring	Φ39×Φ32.5×10	1
3	M013081	Set screw	M4×3	1
4	M013155	Handle grip	Φ32×425	1
5	M012096	Handle end cap	Φ48×Φ39×Φ28.8×33	1
6	M013080	Button head socket screw	M10×20	1
7	M012105	Decorative cap	Φ21.5×Φ18.5×6.3	1

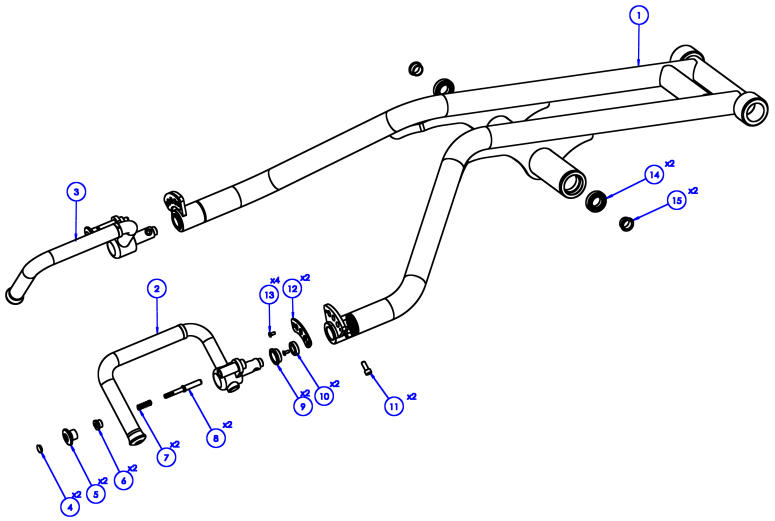

No.	Part No.	Description	Spec	Qty
1		Handle arm frame		1
2		Handle, L		1
3		Handle, R		1
4	M012108	Decorative cap, yellow	Φ21.5×Φ18.5×6.3	2
5	M012102	Knob	Φ45×29.1×M10	2
6	M012092	Pop-pin nut	Φ25.4×M20×1.5×16	2
7	M012093	Pop-pin spring	Φ1×Φ10.5×38	2
8	M012837	Pop-pin plunger	Φ16×Φ12.5×Φ10×82	2
9		Bushing		2
10		Ring		2
11		Screw		2
12		Index plate		2
13		Screw		4
14	M012840	Ball bearing	6006-2Z	2
15	M012826	Flange bushing	Φ36×Φ30×Φ25×16	2

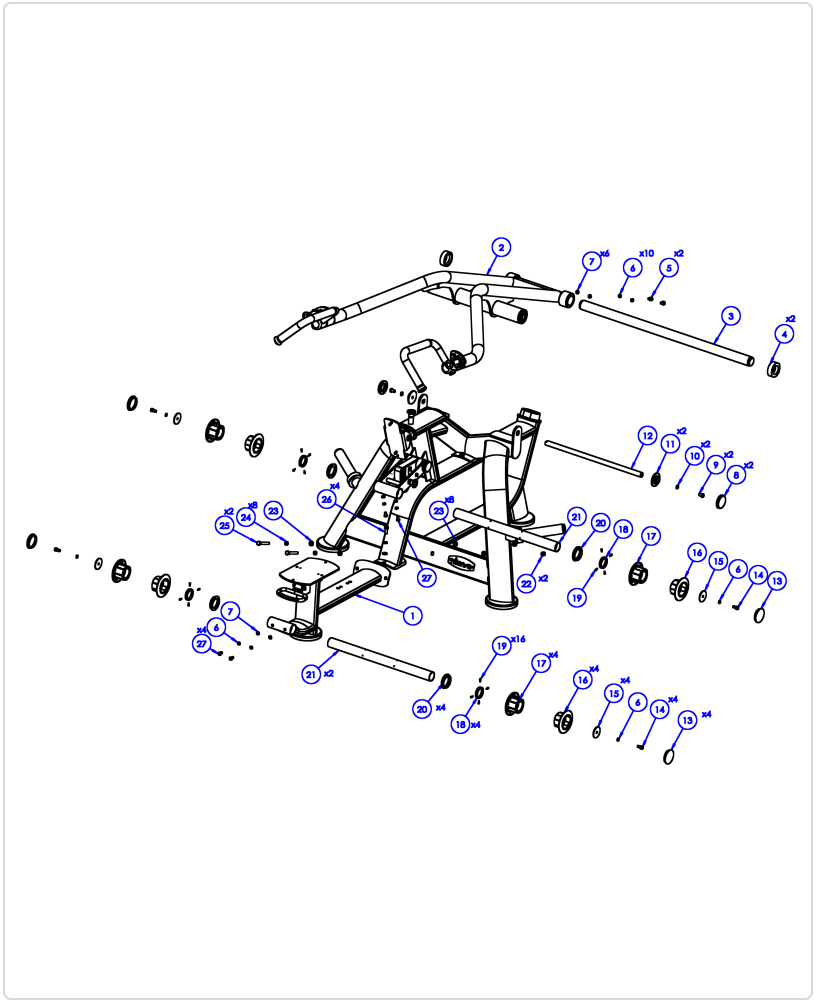

No.	Part No.	Qty
1		1
2		1
3	ZL-06-084	1
4	M012767	2
5	M012768	2
6	M012943	10
7	M012944	6
8	M012769	2
9		2
10		2
11		2
12	ZL-06-026	1
13	M012142	4
14	M013080	4

No.	Part No.	Qty
15	M013122	4
16	M013119	4
17		4
18	M013120	4
19	M013121	16
20		4
21	ZL-06-029	2
22	M013082	2
23	M012944	8
24	M012943	8
25	M012761	2
26	M012942	4
27	M013118	4

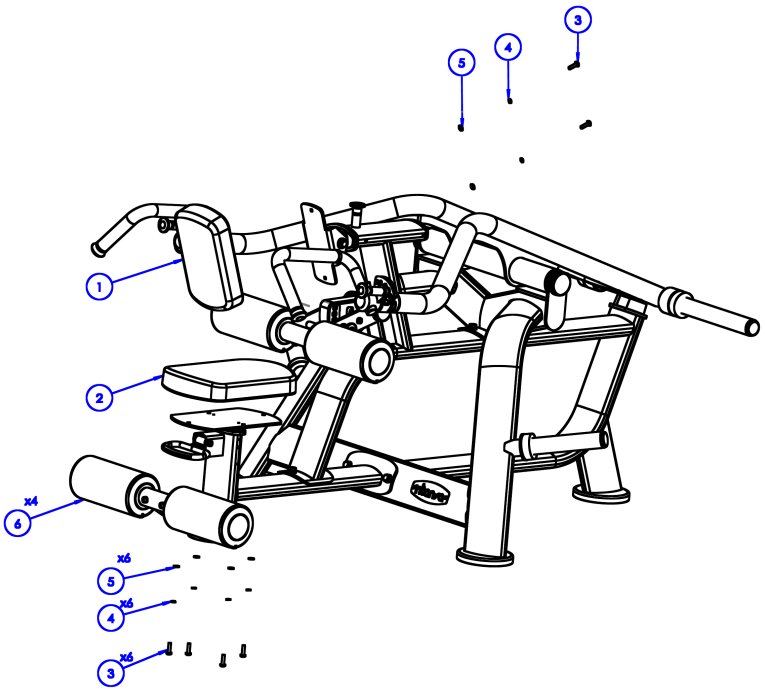

No.	Part No.	Description	Spec	Qty
1	020180010563	Chest pad ● Black	329.4×199.5×65.5	1
1	020180010563	Chest pad ● Brown	329.4×199.5×65.5	1
2	020180010565	Seat pad ● Black	269.4×409.4×63	1
2	020180010565	Seat pad ● Brown	269.4×409.4×63	1
3	M012935	Phillips truss head screw	M8×30	6
4	M012938	Spring lock washer	M8	6
5	M012937	Flat washer	M8	6
6	M012917	Foam roller	Φ135×269	4

Not shown in drawings

No.	Part No.	Description	Spec	Qty
-	ZL-03-092	Rotating frame		1
-	M013106	Anti-scratch plate	39.3×147.7×4	1
-	M013107	Socket head cap screw	M8×40	1
-	M013108	Spacer	Φ20×Φ8.3×30	1
-	M013143	Socket head cap screw	M8×20	1
-	M012948	Star nut (for end cap Φ49.5)	M8×Φ46	4
-	M013076	Star nut (for end cap Φ60)	M8×Φ56	2
-	M013077	End cap	Φ60×Φ54×17×M8	2
-	M013123	Socket head cap screw	M10×20	4
-	M013116	Spring lock washer	M10	10
-	M013117	Hex bolt	M10×20	2
-	O008766	Logo decal	149.5×59.7×4.5×0.5	1
-	O008773	Exercise instruction decal	230×65	1
-	020130030283	Warning decal	46×108	1
-	020130030284	Pinch point warning decal	50.8×73.2	2
-	020130040216	Maintenance decal	45×85	1