

ZL-07

SERVICE PARTS LIST

Upholstery color / Part No.

Upholstery	Black	Brown
Back pad	020180020487	020180020487
Seat pad	020180010565	020180010565

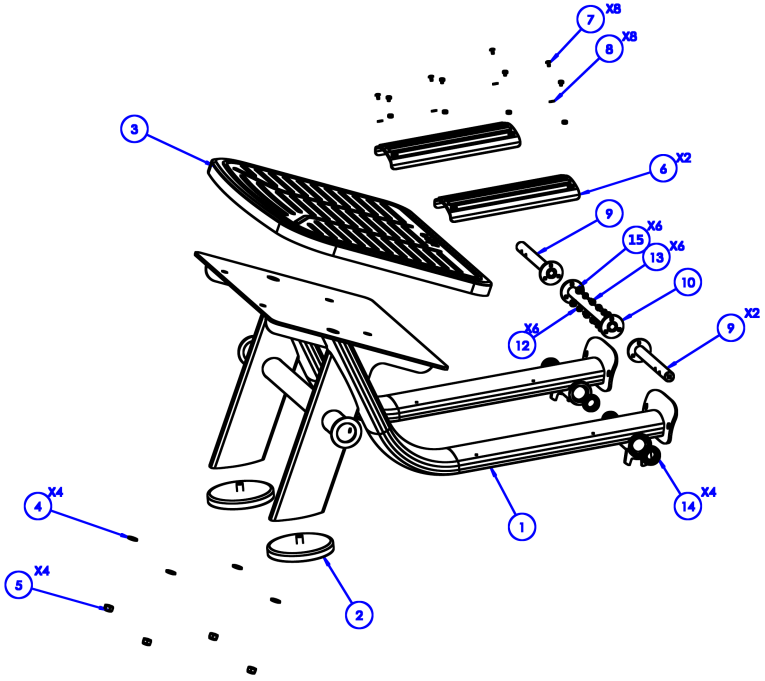

No.	Part No.	Description	Spec	Qty
1	ZL-07-023	Foot platform frame		1
2	M012064	Leveling foot	Φ170×M16×23.5	2
3	M013159	Foot platform mat	617.6×777.6×35.6	1
4	M012944	Flat washer	M12	4
5	M013082	Nylon lock nut	M12	4
6	M013158	Foot pad		2
7	M013157	Phillips truss head screw	M5×10	8
8	M013162	Flat washer	M5	8
9	ZL-07-132	Linkage rod	L255	2
10	ZL-07-134	Connecting bracket	L338	1
12	M012938	Spring lock washer	M8	6
13	M013161	Socket head cap screw	M8×15	6
14	M012076	Ball bearing	6005-2Z	2
14	M013156	Flanged ball bearing	6905RS	2
15	M012937	Flat washer	M8	6

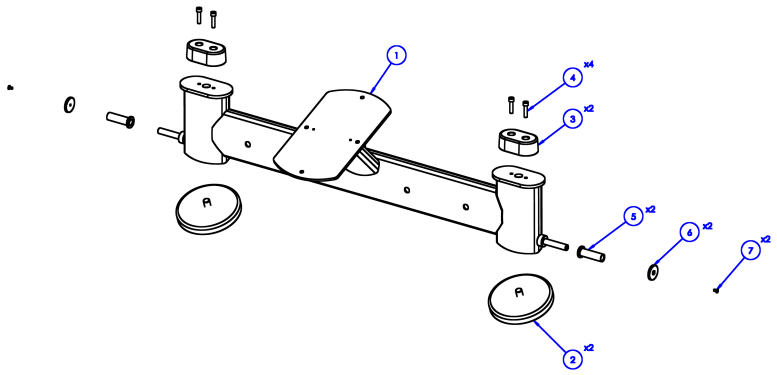

No.	Part No.	Description	Spec	Qty
1	ZL-07-043	Seat frame		1
2	M012064	Leveling foot	Φ170×M16×23.5	2
3	M012825	Bumper pad	109.9×64.9×37	2
4	M012945	Socket head cap screw	M8×35	4
5	M013163	Spacer	Φ30×Φ20×Φ15.2×69.5	2
6	M013164	End plate	Φ40×5	2
7	M013165	Socket countersunk head screw	M5×10	2

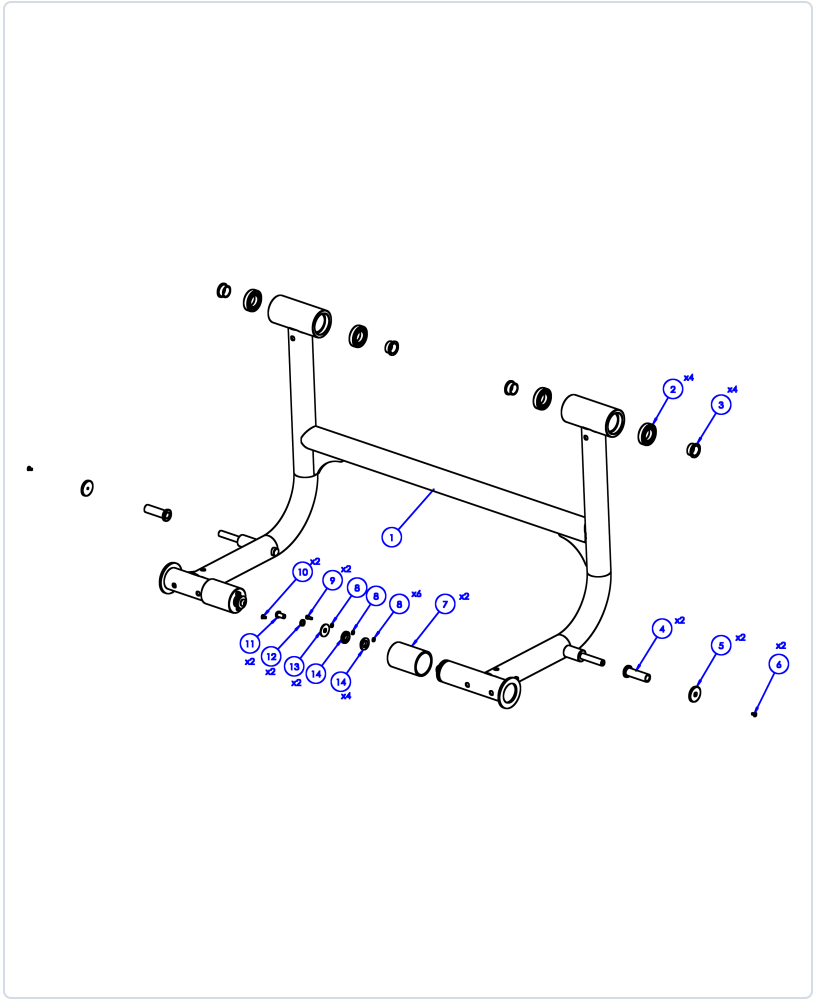

No.	Part No.	Description	Spec	Qty
1	ZL-07-014	Rotating frame		1
2	M012840	Ball bearing	6006-2Z	4
3	M012826	Flange bushing	Φ36×Φ30×Φ25×16	4
4	M013163	Spacer	Φ30×Φ20×Φ15.2×69.5	2
5	M013164	End plate	Φ40×5	2
6	M013165	Socket countersunk head screw	M5×10	2
7	ZL-07-107	Rotating sleeve	Φ65×94	2
8	M013162	Flat washer	M5	6
9	M013167	Socket head cap screw	M5×12	2
10	M013165	Socket countersunk head screw	M5×10	2
11	M013080	Button head socket screw	M10×20	2
12	M013116	Spring lock washer	M10	2
13	M013168	Large flat washer	M10	2
14	M013170	Copper bushing	Φ30×Φ24×Φ18×6	4

Left and right handles are different. Both sides are assembled the same way and use the same parts (qty per side).

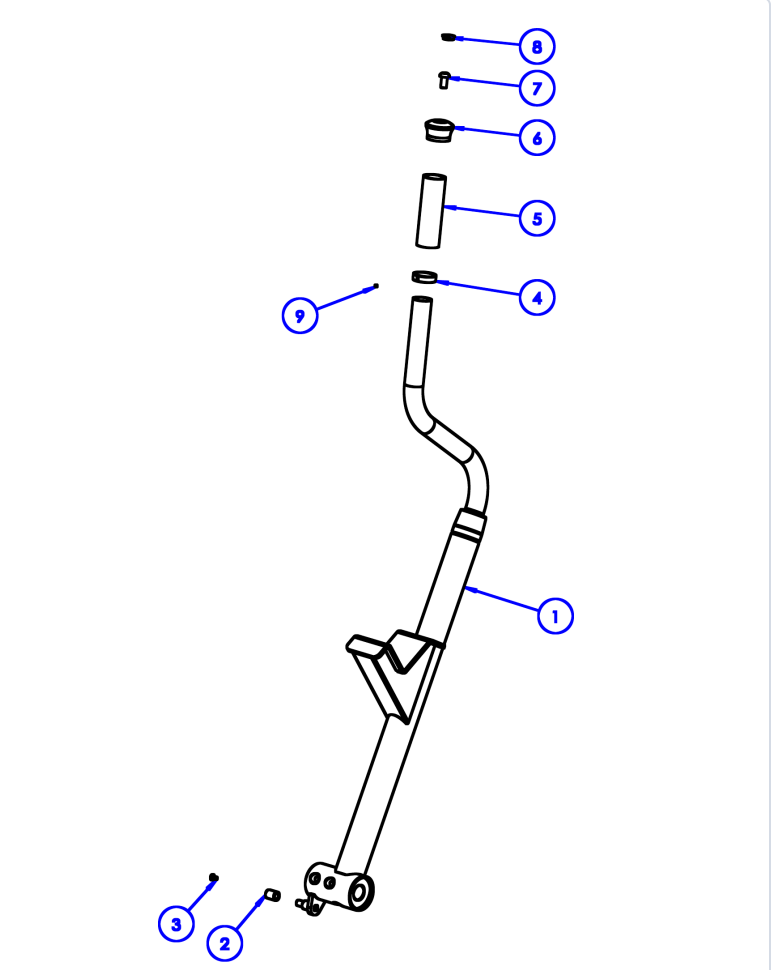

No.	Part No.	Description	Spec	Qty
1	ZL-07-026	Handle, L		1
1	ZL-07-041	Handle, R		1
2	M013169	Spacer	Φ15×20	1
3	M013165	Socket countersunk head screw	M5×10	1
4	M012103	Aluminum ring	Φ39×Φ32.5×10	1
5	M012179	Handle grip	Φ32×3×100	1
6	M012096	Handle end cap	Φ48×Φ39×Φ28.8×33	1
7	M013080	Button head socket screw	M10×20	1
8	M012108	Decorative cap, yellow	Φ21.5×Φ18.5×6.3	1
9	M013081	Set screw	M4×3	1

Qty per weight horn.

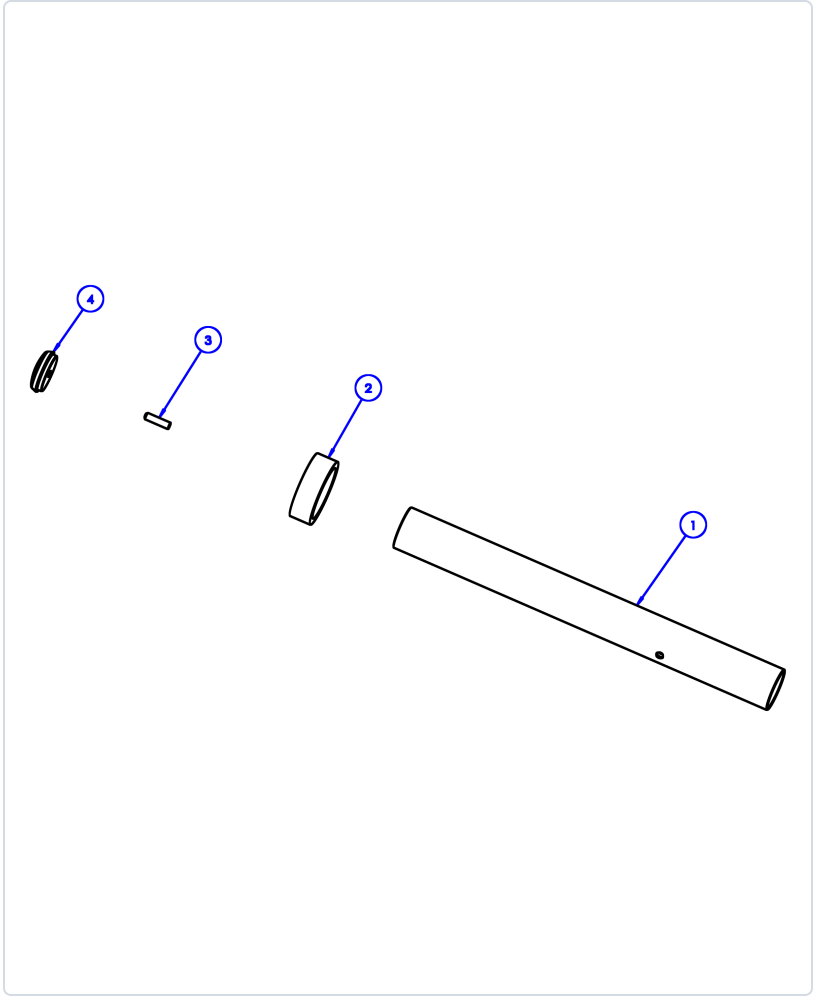

No.	Part No.	Description	Spec	Qty
1		Weight horn tube	L465 / L488	1
2	M012100	Rubber bumper ring	Φ78×Φ48×25	1
3	M012947	Set screw	M8×30	1
4	M012946	Weight horn end cap	Φ49.5×Φ44×17×M8	1

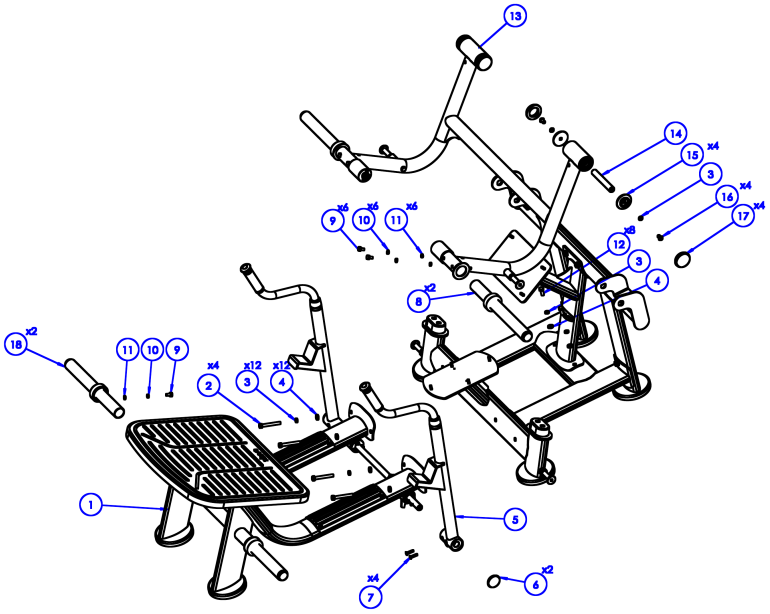

No.	Part No.	Description	Spec	Qty
1		Foot platform	See Foot Platform page	1
2	M012761	Hex bolt	M12×95	4
3	M012943	Spring lock washer	M12	12
4	M012944	Flat washer	M12	12
5		Handle	See Handle page	2
6	M013077	End cap	Φ60×Φ54×17×M8	2
7	M013152	Socket countersunk head screw	M8×35	4
8		Weight horn	L465 (See Weight Horn page)	2
9	M013117	Hex bolt	M10×20	6
10	M013116	Spring lock washer	M10	6
11	M013118	Saddle washer	M10	6
12	M012942	Hex bolt	M12×30	8
13		Rotating frame	See Rotating Frame page	1
14	ZL-02-109-V1	Pivot shaft	Φ25×170	2
15	M012767	Bearing retainer	Φ72×Φ35×15×M45	4
16	M012768	Button head socket screw	M12×20	4
17	M012769	Pivot end cap	Φ72×17×M45	4
18		Weight horn	L488 (See Weight Horn page)	2

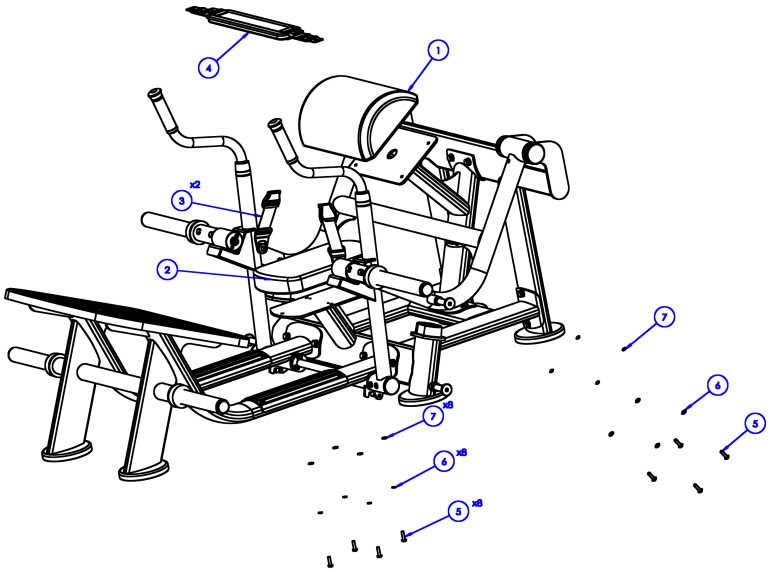

No.	Part No.	Description	Spec	Qty
1	020180020487	Back pad ● Black	459.1×300×120×R153.8	1
1	020180020487	Back pad ● Brown	459.1×300×120×R153.8	1
2	020180010565	Seat pad ● Black	269.4×409.4×63	1
2	020180010565	Seat pad ● Brown	269.4×409.4×63	1
3		Belt bracket		2
4		Belt		1
5	M012935	Phillips truss head screw	M8×30	8
6	M012938	Spring lock washer	M8	8
7	M012937	Flat washer	M8	8

Not shown in drawings

No.	Part No.	Description	Spec	Qty
-	ZL-10-147	Foot plate	761.5×600.9×6	1
-	ZL-07-004	Support frame		1
-	ZL-07-038	Back pad frame		1
-	M012947	Set screw	M8×30	2
-	M012948	Star nut (for end cap Φ49.5)	M8×Φ46	4
-	M013082	Nylon lock nut	M12	4
-	M012064	Leveling foot	Φ170×M16×23.5	2
-	O008767	Logo decal, small	40.6×90.9×7.8×0.5	1
-	O008774	Exercise instruction decal	230×65	1
-	020130030283	Warning decal	46×108	1
-	020130030284	Pinch point warning decal	50.8×73.2	4
-	020130040216	Maintenance decal	45×85	1