

ZL-08

SERVICE PARTS LIST

Upholstery color / Part No.

Upholstery	Black	Brown
Back pad	020180010567	020180010567
Seat pad	M013085	M012765

One side shown. Left and right sides use the same parts (qty per side).

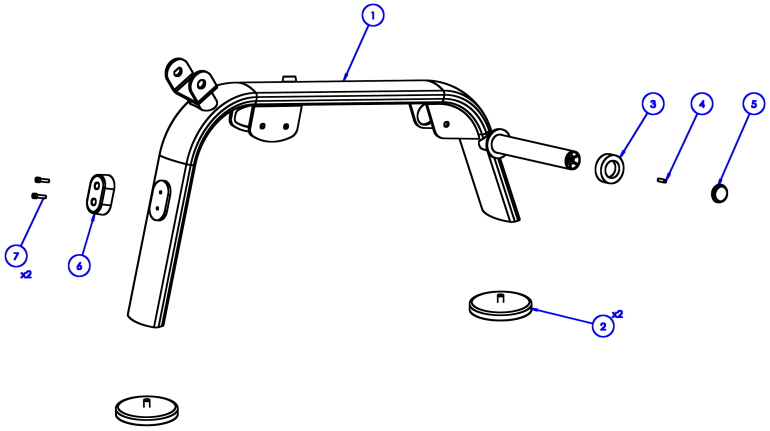

No.	Part No.	Description	Spec	Qty
1	ZL-08-040	Upright frame		1
2	M012064	Leveling foot	Φ170×M16×23.5	2
3	M012100	Rubber bumper ring	Φ78×Φ48×25	1
4	M012947	Set screw	M8×30	1
5	M012946	Weight horn end cap	Φ49.5×Φ44×17×M8	1
6	M012825	Bumper pad	109.9×64.9×37	1
7	M012945	Socket head cap screw	M8×35	2

Left and right handles are different. Both sides are assembled the same way and use the same parts (qty per side).

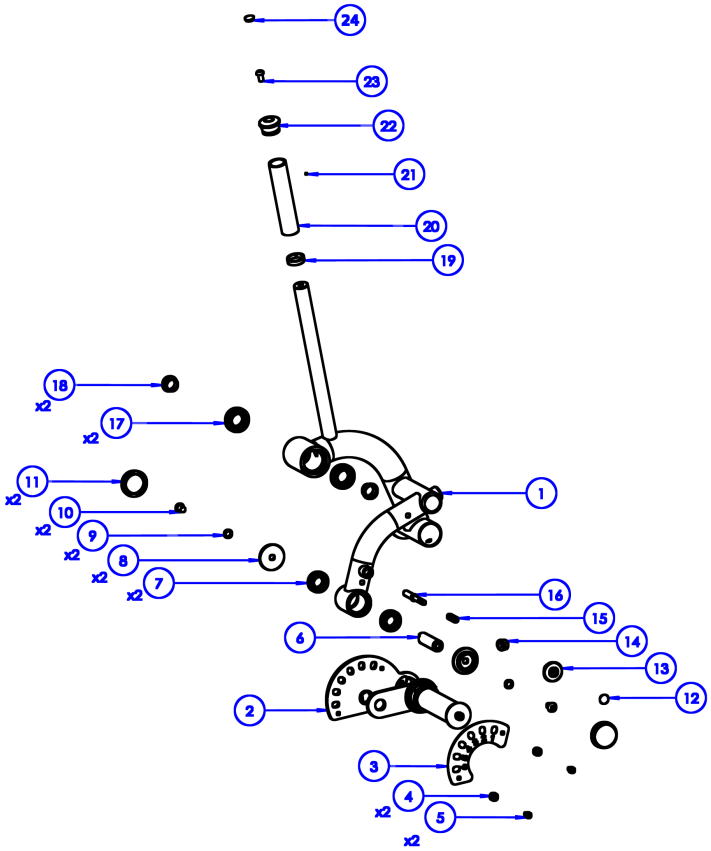

No.	Part No.	Description	Spec	Qty
1	ZL-08-008	Handle frame, L		1
1	ZL-08-18	Handle frame, R		1
2		Adjustment disc		1
3		Index plate		1
4		Nut		2
5		Screw		2
6		Pin		1
7	M012076	Ball bearing	6005-2Z	2
8	M012767	Bearing retainer	Φ72×Φ35×15×M45	2
9	M012943	Spring lock washer	M12	2
10	M012768	Button head socket screw	M12×20	2
11	M012769	Pivot end cap	Φ72×17×M45	2
12	M012282	Ball knob, yellow	Φ40.8×17.6×M10×39.3	1
13		Cap		1
14	M012092	Pop-pin nut	Φ25.4×M20×1.5×16	1
15	M012173	Pop-pin spring	Φ1.2×Φ10.5×38	1
16	M012837	Pop-pin plunger	Φ16×Φ12.5×Φ10×82	1
17	M012840	Ball bearing	6006-2Z	2
18	M012826	Flange bushing	Φ36×Φ30×Φ25×16	2
19	M012103	Aluminum ring	Φ39×Φ32.5×10	1
20	M013171	Handle grip	Φ32×180	1
21	M013081	Set screw	M4×3	1
22	M012096	Handle end cap	Φ48×Φ39×Φ28.8×33	1
23	M013080	Button head socket screw	M10×20	1
24	M012108	Decorative cap, yellow	Φ21.5×Φ18.5×6.3	1

Two foam roller arms per machine (qty per arm).

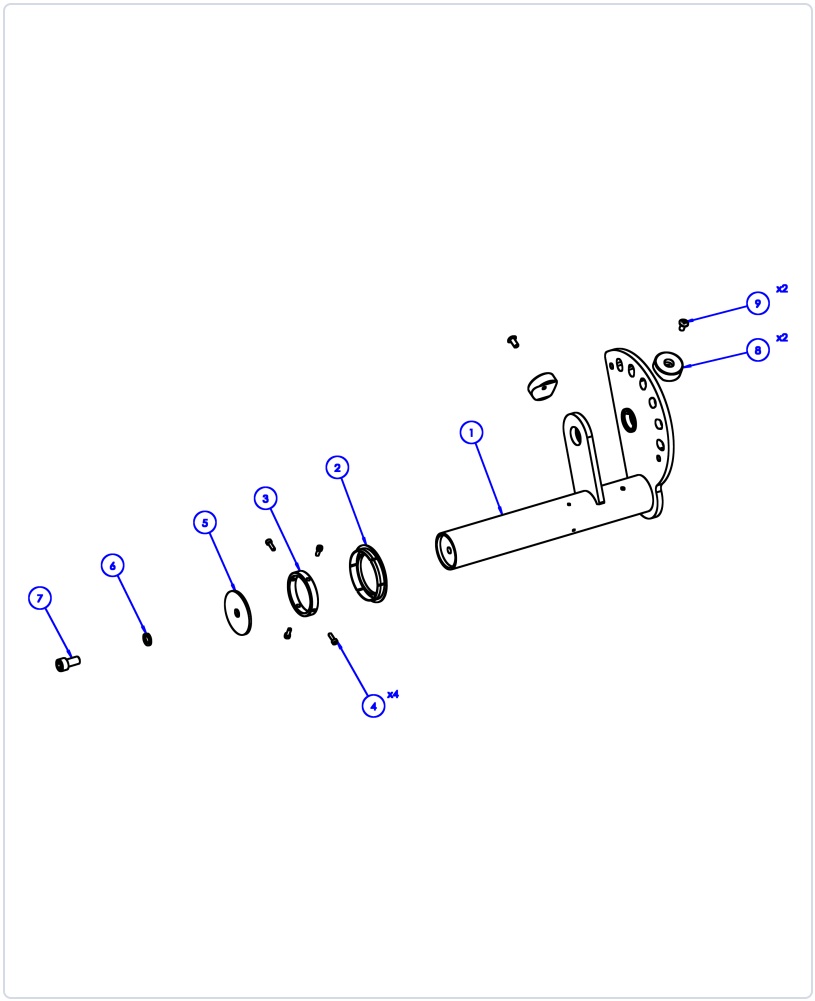

No.	Part No.	Description	Spec	Qty
1	ZL-08-013	Foam roller arm		1
2	M013119	Cover cap	Φ78.1×Φ69.8×Φ54×12.8	1
3	M013120	Retaining ring	Φ60×Φ51×10	1
4	M013121	Socket head cap screw	M4×12	4
5	M013122	Large washer	Φ10×Φ60×3	1
6	M013116	Spring lock washer	M10	1
7	M013123	Socket head cap screw	M10×20	1
8	M013128	Bumper	Φ13×Φ38×15	2
9	M013172	Phillips truss head screw	M6×12	2

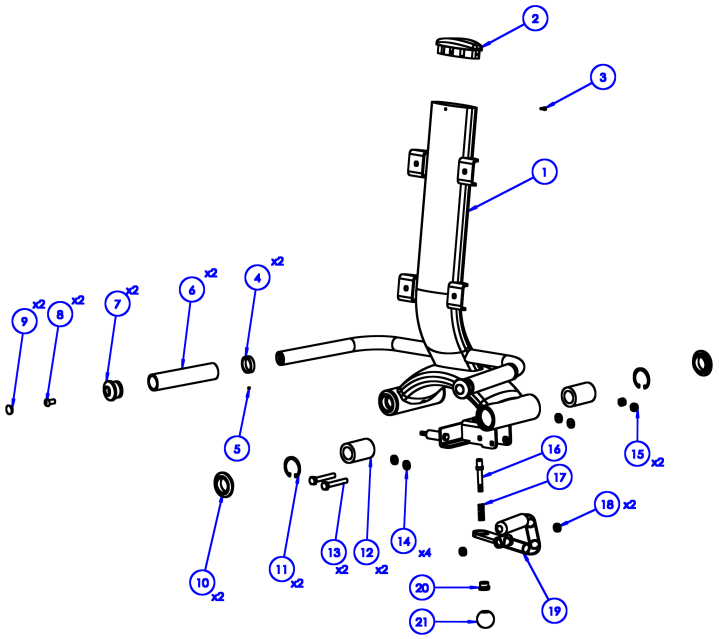

No.	Part No.	Description	Spec	Qty
1	ZL-08-024	Back pad frame		1
2	M012822	Tube end plug	58×130×3 tube	1
3	M012933	Phillips pan head tapping screw	M4×15	1
4	M012103	Aluminum ring	Φ39×Φ32.5×10	2
5	M013081	Set screw	M4×3	1
6	M013171	Handle grip	Φ31.5×Φ39×180	2
7	M012096	Handle end cap	Φ48×Φ39×Φ28.8×33	2
8	M013080	Button head socket screw	M10×20	2
9	M012105	Decorative cap	Φ21.5×Φ18.5×6.3	2
10		Bearing end cap		2
11	M013175	Hole retaining ring	Φ47	2
12	M013174	Linear bearing	LMES30UU	2
13	M013179	Hex bolt	M10×70	2
14	M013115	Flat washer	M10	4
15	M013180	Nylon lock nut	M10	2
16	M012837	Pop-pin plunger	Φ16×Φ12.5×Φ10×82	1
17	M012173	Pop-pin spring	Φ1.2×Φ10.5×38	1
18	M013132	Nylon lock nut	M8	2
19		Small handle		1
20	M012092	Pop-pin nut	Φ25.4×M20×1.5×16	1
21	M012282	Ball knob, yellow	Φ40.8×17.6×M10×39.3	1

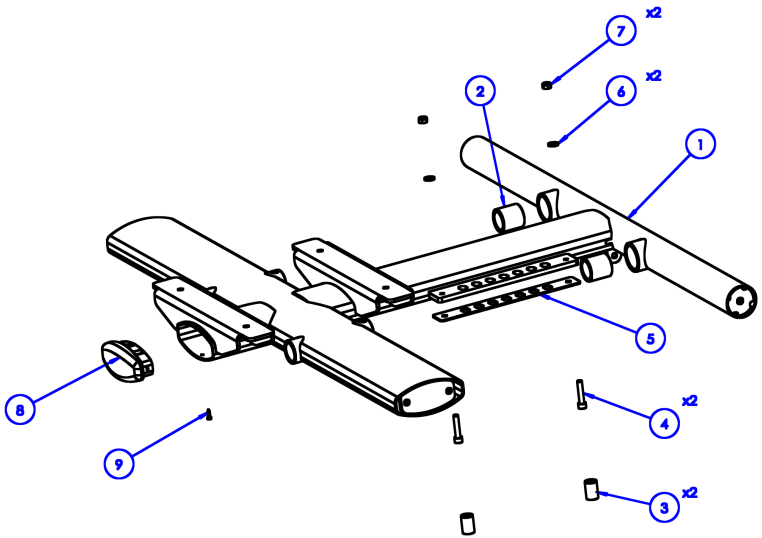

No.	Part No.	Description	Spec	Qty
1	ZL-08-036	Seat frame		1
2		Bushing		1
3	ZL-08-093	Spacer	Φ20×Φ8.3×30	2
4	M013107	Socket head cap screw	M8×40	2
5	M013181	Anti-scratch plate	35×265×2	1
6	M012937	Flat washer	M8	2
7	M013132	Nylon lock nut	M8	2
8	M012822	Tube end plug	58×130×3 tube	1
9	M012933	Phillips pan head tapping screw	M4×15	1

Qty per weight horn.

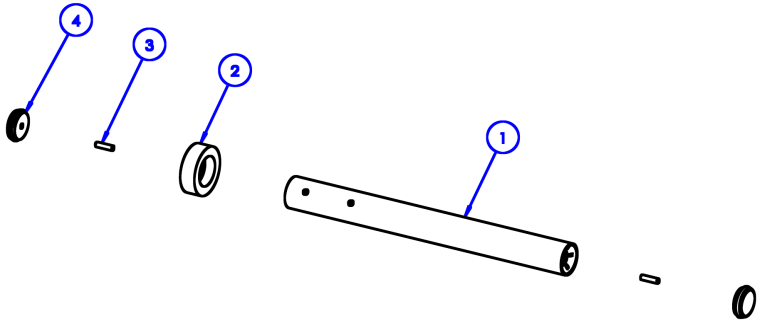

No.	Part No.	Description	Spec	Qty
1	ZL-08-041	Weight horn tube	L494	1
2	M012100	Rubber bumper ring	Φ78×Φ48×25	1
3	M012947	Set screw	M8×30	2
4	M012946	Weight horn end cap	Φ49.5×Φ44×17×M8	2

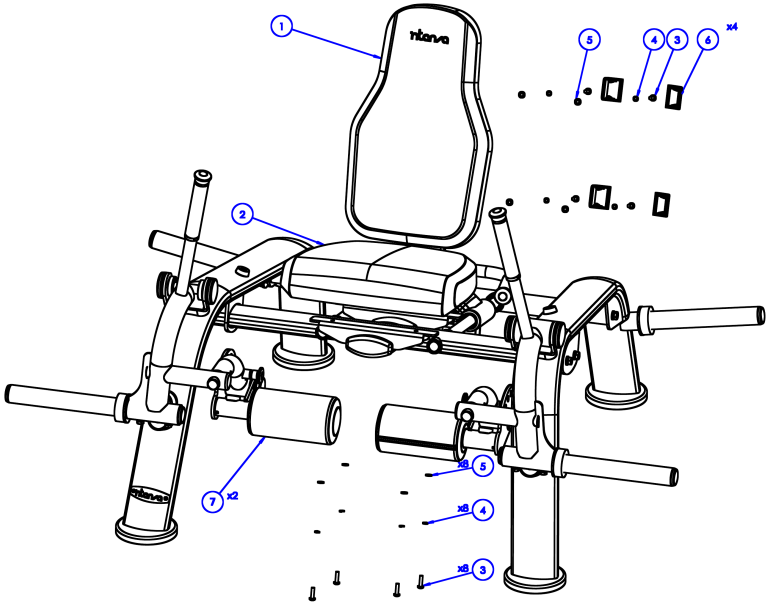

No.	Part No.	Description	Spec	Qty
1	020180010567	Back pad ● Black	519.4×510.8×120	1
1	020180010567	Back pad ● Brown	519.4×510.8×120	1
2	M013085	Seat pad ● Black	266×400×379.1×667.7×75.9	1
2	M012765	Seat pad ● Brown	266×400×379.1×667.7×75.9	1
3	M012935	Phillips truss head screw	M8×30	8
4	M012938	Spring lock washer	M8	8
5	M012937	Flat washer	M8	8
6	M012143	Foam roller sleeve	Φ125×Φ73×Φ51.9×53.6	2
6	M012142	Foam roller end cap	Φ78×Φ69.8×14	2
7	020180100020	Foam roller	Φ130×Φ51×265	2

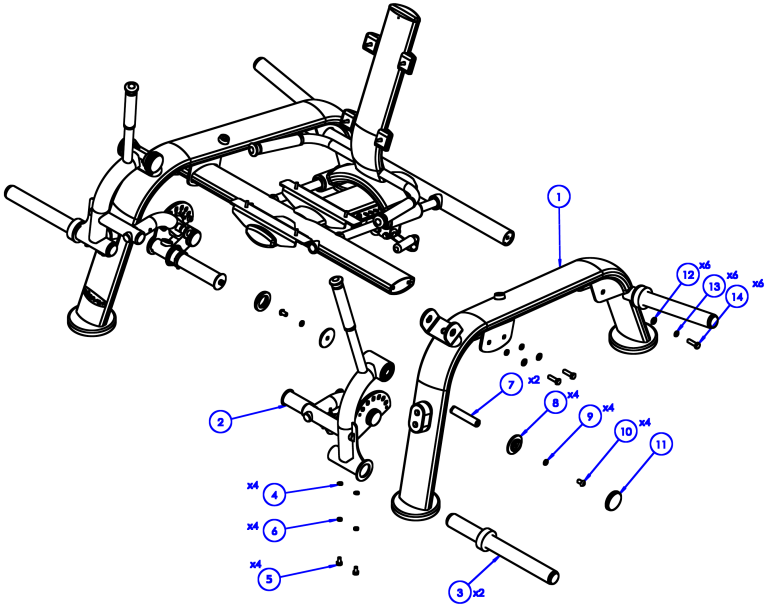

No.	Part No.	Description	Spec	Qty
1		Upright frame	See Upright Frame page	2
2		Handle	See Handle page	2
3		Weight horn	See Weight Horn page	2
4	M013118	Saddle washer	M10	4
5	M013117	Hex bolt	M10×20	4
6	M013116	Spring lock washer	M10	4
7	ZL-08-095	Pivot shaft	Φ25×122	2
8	M012767	Bearing retainer	Φ72×Φ35×15×M45	4
9	M012943	Spring lock washer	M12	4
10	M012768	Button head socket screw	M12×20	4
11	M012769	Pivot end cap	Φ72×17×M45	4
12	M012944	Flat washer	M12	6
13	M012943	Spring lock washer	M12	6
14	M013184	Hex bolt	M12×40	6

Not shown in drawings

No.	Part No.	Description	Spec	Qty
-		Foam roller shaft	Φ25×92	2
-	M013110	Bearing retainer	Φ60×Φ35×15×M45	4
-	M012768	Button head socket screw	M12×20	4
-	M013109	Pivot end cap	Φ60×17×M45	4
-	M013177	Ball bearing	61800-2Z	2
-	M013178	Handle grip with end cap	Φ31×Φ35×100	1
-	020040160309	Guide rod	Φ30×682	2
-	M013182	Socket countersunk head screw	M8×30	2
-	M013183	Gas spring	QDH22×10-424×176-15KG	1
-	030010020201	Hex bolt	M8×35	1
-	M012104	Tube end plug	Φ49.5×Φ45.5×Φ22×35×38.5	2
-	M012948	Star nut (for end cap Φ49.5)	M8×Φ46	6
-	M013102	Cover cap	46×41×62.6×6	4
-	O008767	Logo decal, small	40.6×90.9×7.8×0.5	1
-	O008775	Exercise instruction decal	90×200	1
-	020130030283	Warning decal	46×108	1
-	020130030284	Pinch point warning decal	50.8×73.2	3
-	020130040216	Maintenance decal	45×85	1