

ZL-09

SERVICE PARTS LIST

Upholstery color / Part No.

Upholstery	Black	Brown
Back pad	020180010567	020180010567
Seat pad	M013085	M012765

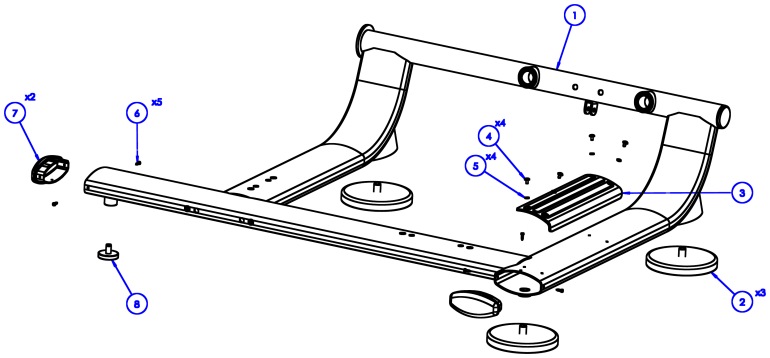

No.	Part No.	Description	Spec	Qty
1	ZL-09-008	Base frame		1
2	M012064	Leveling foot	Φ170×M16×23.5	3
3	M013187	Foot pad		1
4	M013157	Phillips truss head screw	M5×10	4
5	M013162	Flat washer	M5	4
6	M012933	Phillips pan head tapping screw	M4×15	5
7	M012822	Tube end plug	58×130×3 tube	2
8	M013203	Aluminum end cap	Φ55×22×M8	1

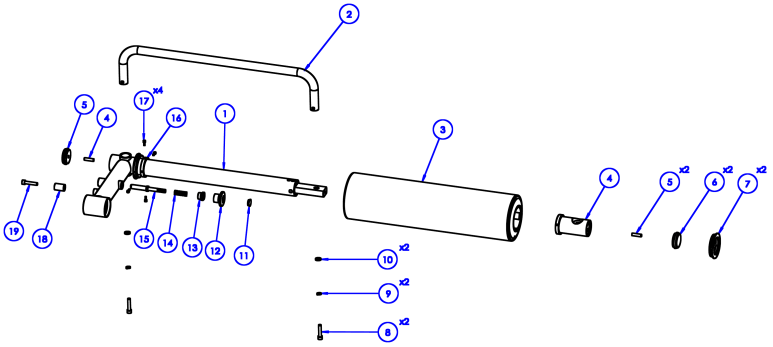

No.	Part No.	Description	Spec	Qty
1	ZL-09-019	Upper foam roller arm		1
2	ZL-09-022	Handle		1
3	020160080363	Foam roller	Φ142×530	1
4		Fixing bracket		1
5	M012947	Set screw	M8×30	2
6	M012946	Weight horn end cap	Φ49.5×Φ44×17×M8	2
7	M013119	Cover cap	Φ78.1×Φ69.8×Φ54×12.8	2
8	M013107	Socket head cap screw	M8×40	2
9	M012938	Spring lock washer	M8	2
10	M012937	Flat washer	M8	2
11	M012108	Decorative cap, yellow	Φ21.5×Φ18.5×6.3	1
12	M012102	Knob	Φ45×29.1×M10	1
13	M012092	Pop-pin nut	Φ25.4×M20×1.5×16	1
14	M012173	Pop-pin spring	Φ1.2×Φ10.5×38	1
15	M013204	Pop-pin plunger	Φ15.9×Φ12.5×Φ9.9×111	1
16	M013120	Retaining ring	Φ60×Φ51×10	1
17	M013121	Socket head cap screw	M4×12	4
18	M013108	Spacer	Φ20×Φ8.3×30	1
19	M013107	Socket head cap screw	M8×40	1

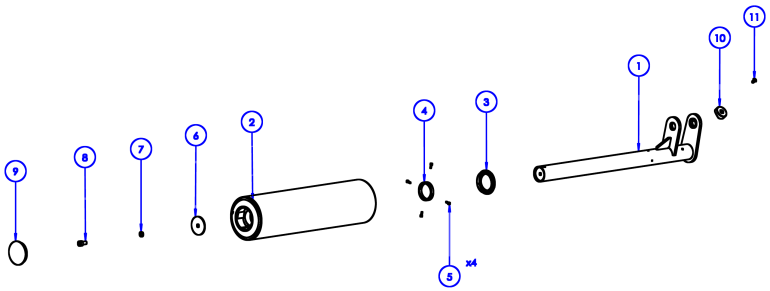

No.	Part No.	Description	Spec	Qty
1		Lower foam roller arm		1
2	020160080363	Foam roller	Φ142×530	1
3	M013119	Cover cap	Φ78.1×Φ69.8×Φ54×12.8	1
4	M013120	Retaining ring	Φ60×Φ51×10	1
5	M013121	Socket head cap screw	M4×12	4
6	M013122	Large washer	Φ10×Φ60×3	1
7	M013116	Spring lock washer	M10	1
8	M013123	Socket head cap screw	M10×20	1
9	M012142	Foam roller end cap	Φ78×Φ69.8×14	1
10	M013128	Bumper	Φ13×Φ38×15	1
11	M013172	Phillips truss head screw	M6×12	1

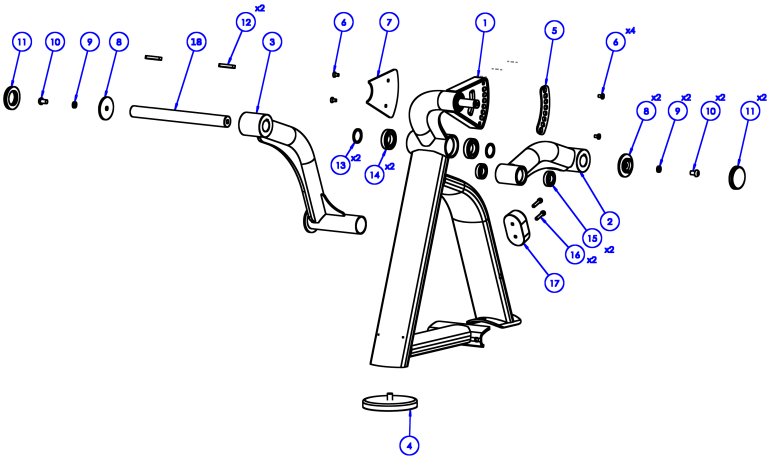

No.	Part No.	Description	Spec	Qty
1	ZL-09-015	Upright frame		1
2		Swing frame		1
3	ZL-09-013	Swing arm		1
4	M012064	Leveling foot	Φ170×M16×23.5	1
5	ZL-09-072	Index plate		1
6	M013104	Socket countersunk head screw	M8×15	4
7	M013106	Anti-scratch plate	39.3×147.7×4	1
8	M012767	Bearing retainer	Φ72×Φ35×15×M45	2
9	M012943	Spring lock washer	M12	2
10	M012768	Button head socket screw	M12×20	2
11	M012769	Pivot end cap	Φ72×17×M45	2
12	020040210212	Flat key	8×10×60	2
13	ZL-09-079	Retaining ring	Φ35.5×45×3	2
14	M013149	Ball bearing	6007-2Z	2
15		Ball bearing		2
16	M012945	Socket head cap screw	M8×35	2
17	M012825	Bumper pad	109.9×64.9×37	1
18	ZL-09-078	Pivot shaft	Φ35×365	1

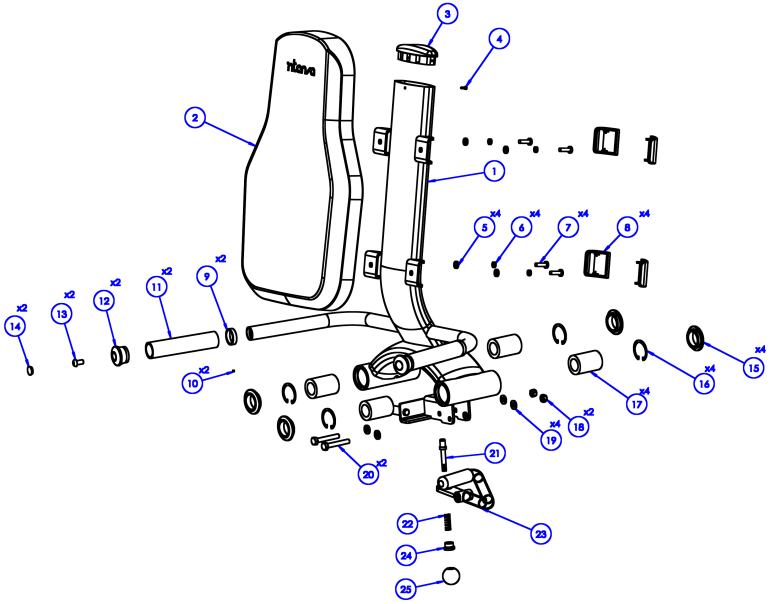

No.	Part No.	Qty
1	ZL-08-024	1
2	020180010567 Black	1
2	020180010567 Brown	1
3	M012822	1
4	M012933	1
5	M012937	4
6	M012938	4
7	M012935	4
8	M013102	4
9	M012103	2
10	M013081	2
11	M013171	2
12	M012096	2

No.	Part No.	Qty
13	M013080	2
14	M012105	2
15	ZL-08-088	4
16	M013175	4
17	M013174	4
18	M013180	2
19	M013115	4
20	M013179	2
21	M012837	1
22	M012173	1
23	ZL-08-027	1
24	M012092	1
25	M012282	1

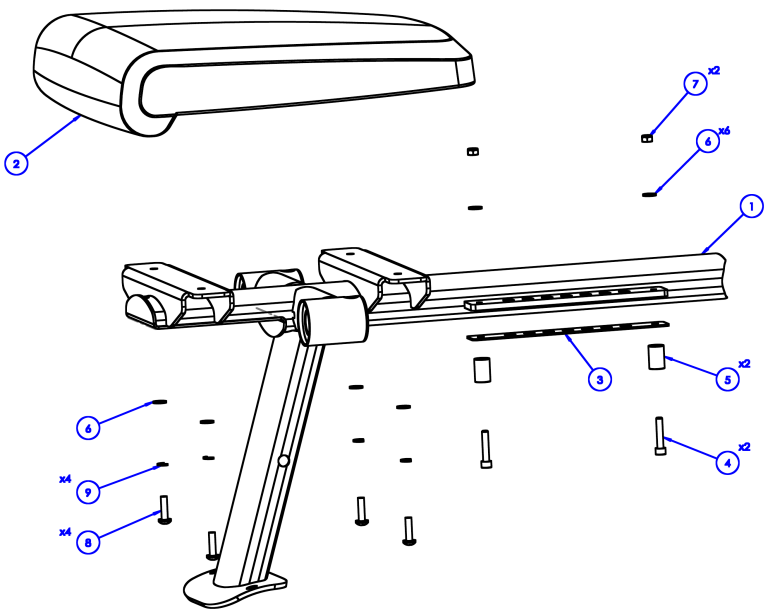

No.	Part No.	Description	Spec	Qty
1	ZL-09-034	Seat frame		1
2	M013085	Seat pad ● Black	266×400×379.1×667.7×75.9	1
2	M012765	Seat pad ● Brown	266×400×379.1×667.7×75.9	1
3	M013181	Anti-scratch plate	35×265×2	1
4	M013107	Socket head cap screw	M8×40	2
5	M013108	Spacer	Φ20×Φ8.3×30	2
6	M012937	Flat washer	M8	6
7	M013132	Nylon lock nut	M8	2
8	M012935	Phillips truss head screw	M8×30	4
9	M012938	Spring lock washer	M8	4

Qty per weight horn.

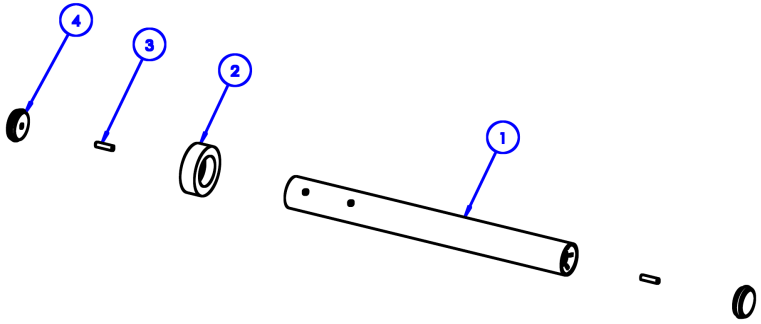

No.	Part No.	Description	Spec	Qty
1		Weight horn tube	L527 / L491	1
2	M012100	Rubber bumper ring	Φ78×Φ48×25	1
3	M012947	Set screw	M8×30	2
4	M012946	Weight horn end cap	Φ49.5×Φ44×17×M8	2

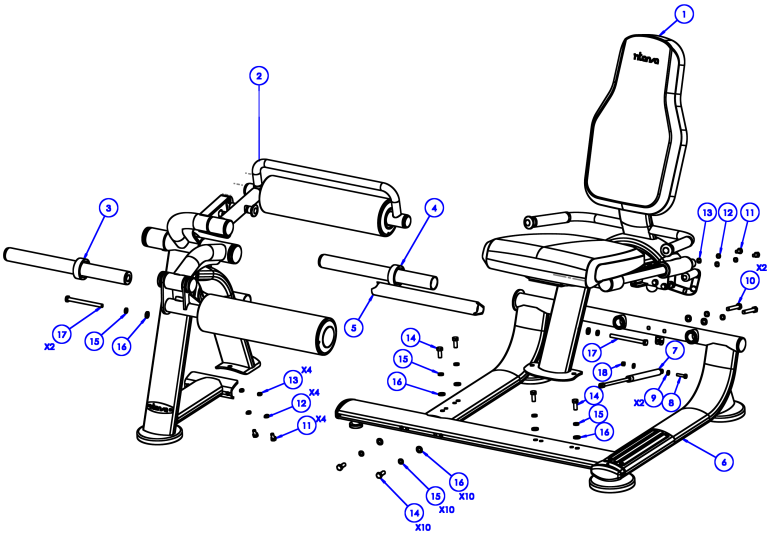

No.	Part No.	Description	Spec	Qty
1		Back pad frame	See Back Pad Frame page	1
2		Upper foam arm	See Upper Foam Arm page	1
3		Weight horn	L527 (See Weight Horn page)	1
4		Weight horn	L491 (See Weight Horn page)	1
5	ZL-09-012	Connecting frame		1
6		Base frame	See Base Frame page	1
7	M013183	Gas spring	QDH22×10-424×176-15KG	1
8	030010020201	Hex bolt	M8×35	1
9	M012937	Flat washer	M8	2
10	M013206	Hex bolt	M12×75	2
11	M013117	Hex bolt	M10×20	4
12	M013116	Spring lock washer	M10	4
13	M013118	Saddle washer	M10	4
14	M012942	Hex bolt	M12×30	6
15	M012943	Spring lock washer	M12	10
16	M012944	Flat washer	M12	10
17	M013153	Hex bolt	M12×150	2
18	M013132	Nylon lock nut	M8	1

Not shown in drawings

No.	Part No.	Description	Spec	Qty
-		Handle foam grip	Φ25×773	1
-	M012076	Ball bearing	6005-2Z	4
-	ZL-09-078	Pivot shaft	Φ25×102.5	1
-	M013110	Bearing retainer	Φ60×Φ35×15×M45	2
-	M012768	Button head socket screw	M12×20	2
-	M013109	Pivot end cap	Φ60×17×M45	2
-	M013207	Guide rod	Φ30×608	2
-	M013182	Socket countersunk head screw	M8×30	2
-	M013077	End cap	Φ60×Φ54×17×M8	3
-	M012947	Set screw	M8×30	3
-	M013172	Phillips truss head screw	M6×12	1
-	M012110	Bumper	Φ33×Φ38×15	1
-	M012863	Shaft retaining ring	Φ25	1
-	M013177	Ball bearing	61800-2Z	2
-	M013178	Handle grip with end cap	Φ31×Φ35×100	1
-	M012104	Tube end plug	Φ49.5×Φ45.5×Φ22×35×38.5	1
-	M012948	Star nut (for end cap Φ49.5)	M8×Φ46	3
-	O008767	Logo decal, small	40.6×90.9×7.8×0.5	1
-	O008776	Exercise instruction decal	90×200	1
-	020130030283	Warning decal	46×108	1
-	020130030284	Pinch point warning decal	50.8×73.2	2
-	020130040216	Maintenance decal	45×85	1