

ZL-10

SERVICE PARTS LIST

Upholstery color / Part No.

Upholstery	Black	Brown
Seat pad	020180010564	020180010564
Back pad	M013085	M012765
Head pad	020180060281	020180060281

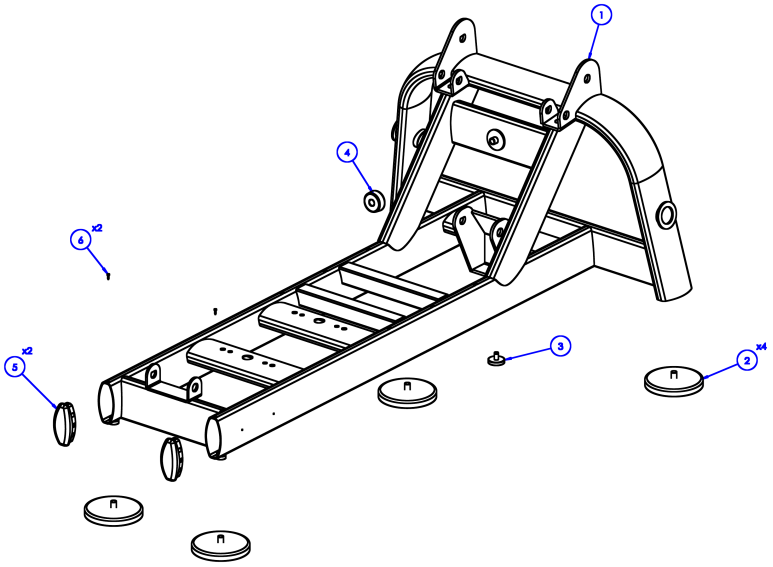

No.	Part No.	Description	Spec	Qty
1	ZL-09-008	Base frame		1
2	M012064	Leveling foot	Φ170×M16×23.5	4
3		Leveling foot, small		1
4	M012288	Bumper	Φ62×Φ58×Φ19×25	1
5	M012822	Tube end plug	58×130×3 tube	2
6	M012933	Phillips pan head tapping screw	M4×15	2

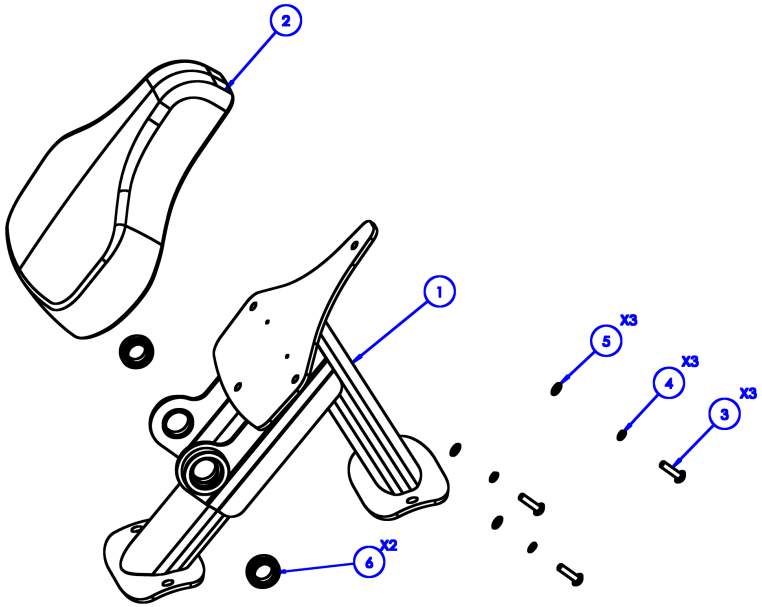

No.	Part No.	Description	Spec	Qty
1	ZL-07-043	Seat frame		1
2	020180010564	Seat pad ● Black	112.5×379.4×374.5×93.9	1
2	020180010564	Seat pad ● Brown	112.5×379.4×374.5×93.9	1
3	M012935	Phillips truss head screw	M8×30	3
4	M012938	Spring lock washer	M8	3
5	M012937	Flat washer	M8	3
6	M013156	Flanged ball bearing	6905RS	2

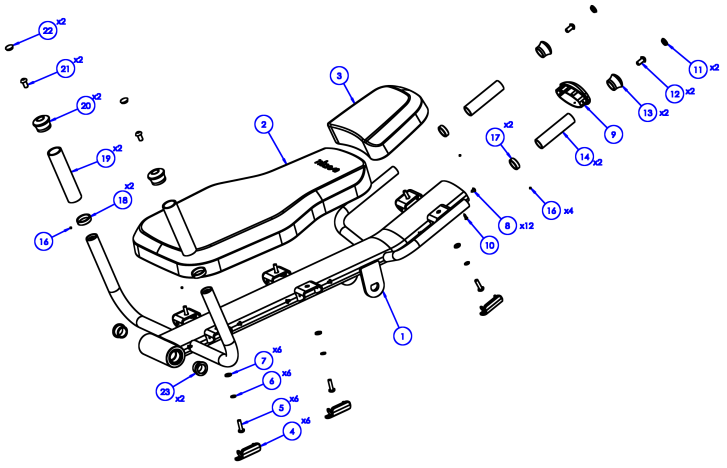

No.	Part No.	Description	Spec	Qty
1	ZL-10-014	Back pad frame		1
2	M013085	Back pad ● Black	266×400×379.1×667.7×75.9	1
2	M012765	Back pad ● Brown	266×400×379.1×667.7×75.9	1
3	020180060281	Head pad ● Black	218.5×249.9×231×67	1
3	020180060281	Head pad ● Brown	218.5×249.9×231×67	1
4	M013102	Cover cap	46×41×62.6×6	6
5	M012935	Phillips truss head screw	M8×30	6
6	M012938	Spring lock washer	M8	6
7	M012937	Flat washer	M8	6
8	M013214	Phillips truss head screw	M4×10	12
9	ZL-10-015	Handle frame		1
10	M012933	Phillips pan head tapping screw	M4×15	1
11		Nut		2
12		Screw		2
13		Handle end cap		2
14	020170010242	Handle grip	Φ25×120	2
15		Handle grip, yellow	Φ32	1
16	M013081	Set screw	M4×3	4
17	M012169	Aluminum ring	Φ32×Φ26×10	2
18	M012103	Aluminum ring	Φ39×Φ32.5×10	2
19	M013215	Handle grip	Φ32×3×160	2
20	M012096	Handle end cap	Φ48×Φ39×Φ28.8×33	2
21	M013080	Button head socket screw	M10×20	4
22	M012105	Decorative cap	Φ21.5×Φ18.5×6.3	4
23	M012167	Flange bushing	Φ38×Φ25×20	2

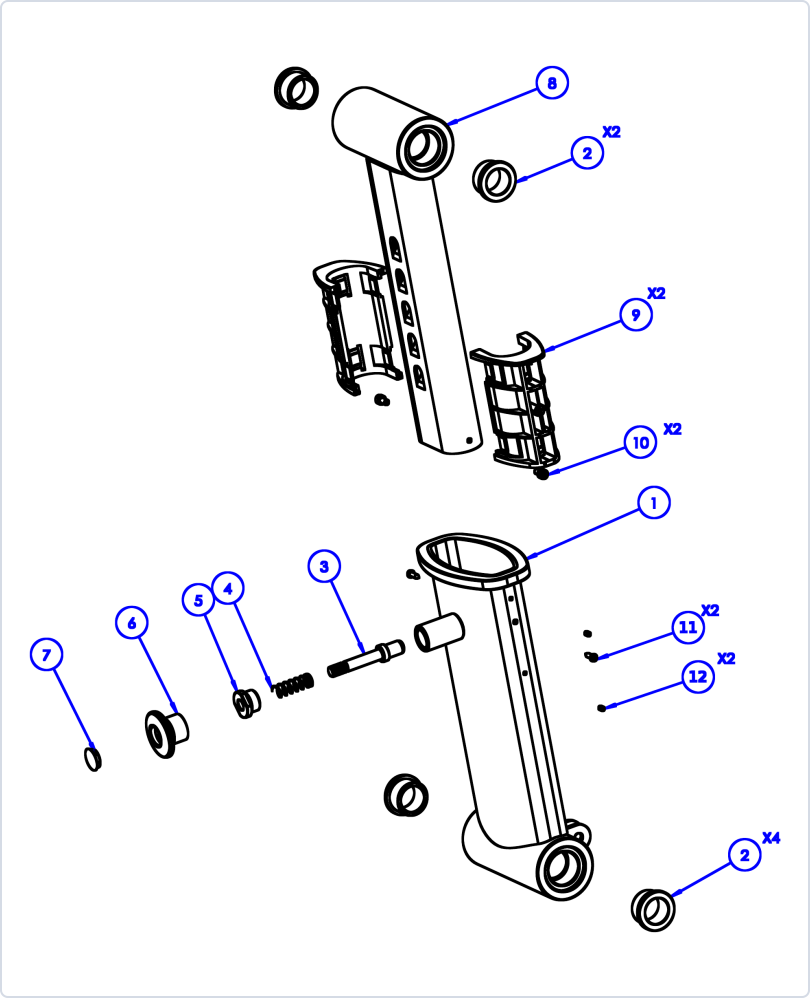

No.	Part No.	Description	Spec	Qty
1		Adjustment frame		1
2	M012167	Flange bushing	Φ38×Φ25×20	6
3	ZL-02-111	Pop-pin plunger	Φ15.9×82	1
4	M012093	Pop-pin spring	Φ1×Φ10.5×38	1
5	M012092	Pop-pin nut	Φ25.4×M20×1.5×16	1
6	M012102	Knob	Φ45×29.1×M10	1
7	M012108	Decorative cap, yellow	Φ21.5×Φ18.5×6.3	1
8	ZL-10-021	Sliding frame		1
9	M012827	Slide sleeve	58×130×3 tube	2
10	M012940	Socket head cap screw	M5×10	2
11	M012933	Phillips pan head tapping screw	M4×15	2
12	M012941	Set screw	M4×6	2

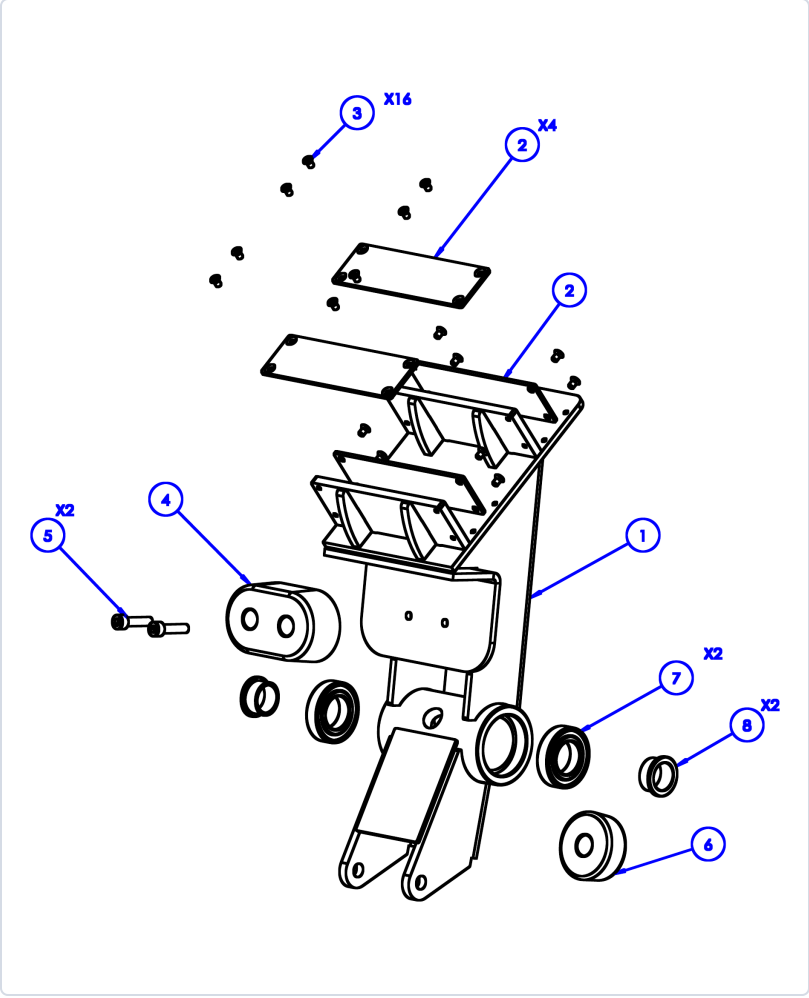

No.	Part No.	Description	Spec	Qty
1	ZL-10-012	Limit frame		1
2	M013216	Limit plate	47×160×3	4
3	M013217	Phillips countersunk screw	M5×8	16
4	M012825	Bumper pad	109.9×64.9×37	1
5	M012945	Socket head cap screw	M8×35	2
6	M012288	Bumper	Φ62×Φ58×Φ19×25	1
7	M012840	Ball bearing	6006-2Z	2
8	ZL-02-110	Flange bushing	Φ38×Φ25×16	2

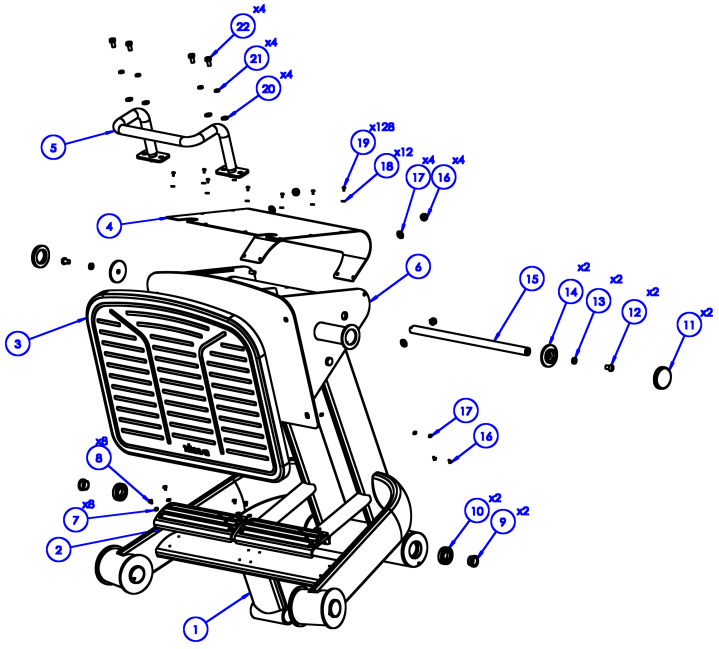

No.	Part No.	Description	Spec	Qty
1		Swing arm		1
2	M013187	Foot pad		2
3	M013159	Foot platform mat	617.6×777.6×35.6	1
4		Rear cover plate		1
5		Handle		1
6	ZL-10-030	Foot platform frame		1
7	M013162	Flat washer	M5	8
8	M013157	Phillips truss head screw	M5×10	8
9	ZL-02-110	Flange bushing	Φ36×Φ25×16	2
10	M012840	Ball bearing	6006-2Z	2
11	M013102	Cover cap	46×41×62.6×6	2
12	M012768	Button head socket screw	M12×20	2
13	M012943	Spring lock washer	M12	2
14	M013110	Bearing retainer	Φ60×Φ35×15×M45	2
15	ZL-10-127	Pivot shaft	Φ25×523.5	1
16	M013082	Nylon lock nut	M12	4
17	M012944	Flat washer	M12	4
18		Washer		12
19		Screw		128
20	M013115	Flat washer	M10	4
21	M013116	Spring lock washer	M10	4
22	M013117	Hex bolt	M10×20	4

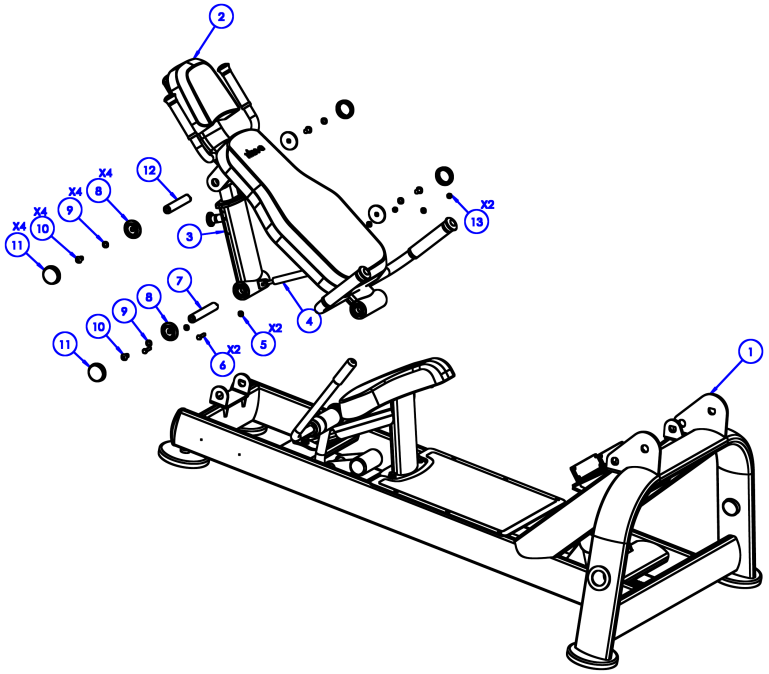

No.	Part No.	Description	Spec	Qty
1		Base frame	See Base Frame page	1
2		Back pad frame	See Back Pad Frame page	1
3		Back pad adjuster	See Back Pad Adjuster page	1
4	ZL-10-037	Linkage arm		2
5	M012943	Spring lock washer	M12	2
6	M013152	Socket countersunk head screw	M8×35	2
7	ZL-10-089	Pivot shaft	Φ25×146.5	2
8	M013110	Bearing retainer	Φ60×Φ35×15×M45	4
9	M012943	Spring lock washer	M12	4
10	M012768	Button head socket screw	M12×20	4
11	M013109	Pivot end cap	Φ60×17×M45	4
12	ZL-10-088	Pivot shaft	Φ25×160.5	1
13	M012943	Spring lock washer	M12	2

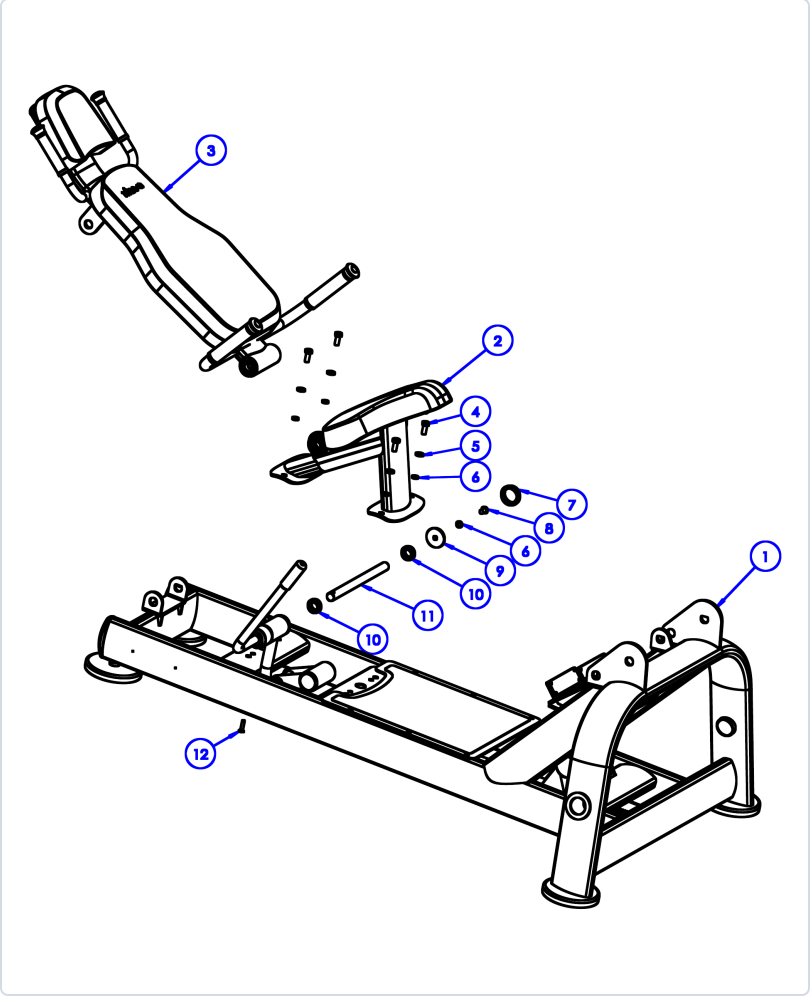

No.	Part No.	Description	Spec	Qty
1		Base frame	See Base Frame page	1
2		Seat frame	See Seat Frame page	1
3		Back pad frame	See Back Pad Frame page	1
4	M012942	Hex bolt	M12×30	2
5	M012943	Spring lock washer	M12	2
6	M012943	Spring lock washer	M12	2
7	M013109	Pivot end cap	Φ60×17×M45	1
8	M012768	Button head socket screw	M12×20	1
9	M013110	Bearing retainer	Φ60×Φ35×15×M45	1
10		Bearing		2
11	ZL-10-092	Pivot shaft	Φ25×340	1
12		Screw		1

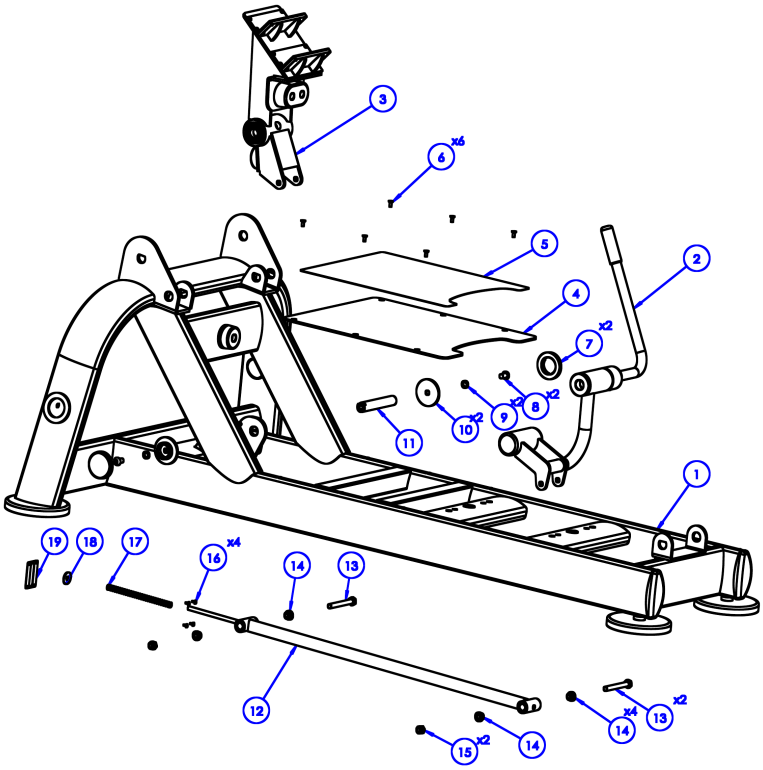

No.	Part No.	Description	Spec	Qty
1		Base frame	See Base Frame page	1
2		Linkage handle		1
3		Limit frame	See Limit Frame page	1
4		Cover plate		1
5		Cover plate		1
6		Screw		6
7	M012767	Bearing retainer	Φ72×Φ35×15×M45	2
8	M012768	Button head socket screw	M12×20	2
9	M012943	Spring lock washer	M12	2
10	M012769	Pivot end cap	Φ72×17×M45	2
11	ZL-10-132	Pivot shaft	Φ25×73.5	1
12		Linkage rod		1
13	M013226	Hex bolt	M12×100	2
14	M012944	Flat washer	M12	4
15	M013082	Nylon lock nut	M12	2
16		Screw		4
17	M013227	Extension spring	Φ1.5×Φ11×203.1	1
18	M012154	Large flat washer	M10	1
19		Spring bracket		1

Not shown in drawings

No.	Part No.	Description	Spec	Qty
-	ZL-10-038	Weight horn tube	L423.5	2
-	ZL-10-027	Weight horn tube	L491	2
-	ZL-10-043	Weight horn tube	L470	2
-	M012946	Weight horn end cap	Φ49.5×Φ44×17×M8	10
-	M012947	Set screw	M8×30	10
-	M012948	Star nut (for end cap Φ49.5)	M8×Φ46	10
-	M012100	Rubber bumper ring	Φ78×Φ48×25	6
-	M013118	Saddle washer	M10	8
-	M013231	Hex bolt	M10×60	6
-	M013218	Socket head cap screw	M10×60	2
-	ZL-10-130	Pivot shaft	Φ25×473.5	1
-	ZL-10-113	Fixing rod	Φ50×145	1
-	ZL-10-150	Spacer	Φ60×Φ50×145	1
-	M012110	Bumper	Φ33×Φ38×15	1

No.	Part No.	Description	Spec	Qty
-	M013172	Phillips truss head screw	M6×12	1
-	020060130237	Rear shroud	507×441.2×167.9	1
-	M013210	Grip tape	380×480	1
-	030020050005	Rivet nut	M6	6
-	M013212	Socket countersunk head screw	M6×15	6
-	020020070173	Anti-scratch plate	71×46×1	1
-	M013229	Flat washer	M4	16
-	M012758	Large flat washer	M12 (Φ30×Φ12.5×2.7)	2
-	M012095	Flange bushing	Φ24×Φ12×12	4
-	O008766	Logo decal	149.5×59.7×0.5	1
-	O008777	Exercise instruction decal	230×65	1
-	020130030283	Warning decal	46×108	1
-	020130030284	Pinch point warning decal	50.8×73.2	4
-	020130040216	Maintenance decal	45×85	1