

ZL-11

SERVICE PARTS LIST

Upholstery color / Part No.

Upholstery	Black	Brown
Head pad	020180060281	020180060281
Back pad	M013085	M012765
Shoulder pad	020180120212	020180120212

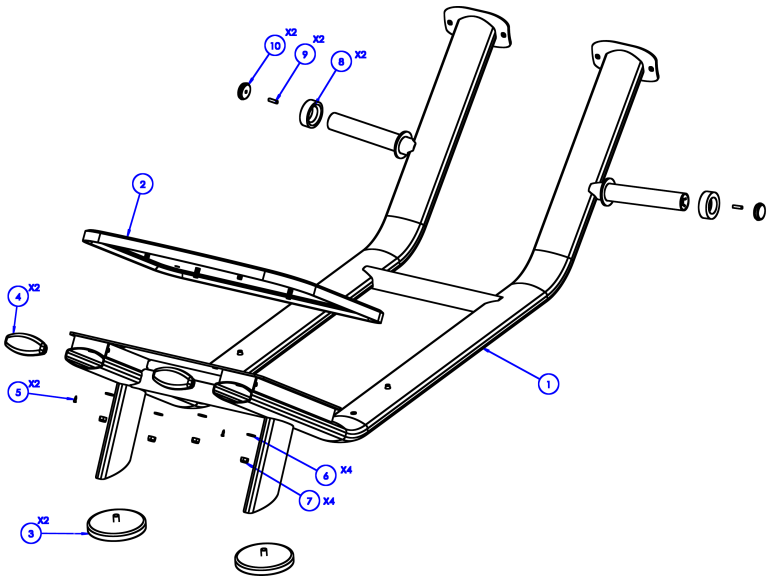

No.	Part No.	Description	Spec	Qty
1	ZL-11-007	Base frame		1
2	M013159	Foot platform mat	617.6×777.6×35.6	1
3	M012064	Leveling foot	Φ170×M16×23.5	2
4	M012822	Tube end plug	58×130×3 tube	2
5	M012933	Phillips pan head tapping screw	M4×15	2
6	M012944	Flat washer	M12	4
7	M013082	Nylon lock nut	M12	4
8	M012100	Rubber bumper ring	Φ78×Φ48×25	2
9	M012947	Set screw	M8×30	2
10	M012946	Weight horn end cap	Φ49.5×Φ44×17×M8	2

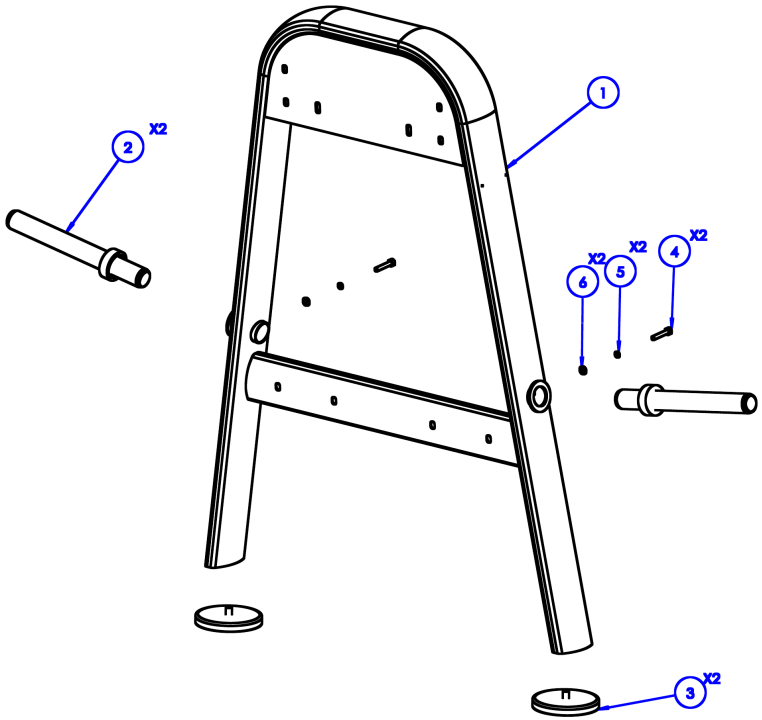

No.	Part No.	Description	Spec	Qty
1	ZL-11-009	Support frame		1
2		Weight horn	Φ50×2.5×247.5	2
3	M012064	Leveling foot	Φ170×M16×23.5	2
4	M013231	Hex bolt	M10×60	2
5	M013116	Spring lock washer	M10	2
6	M013118	Saddle washer	M10	2

Left and right handles are different. Both sides are assembled the same way and use the same parts (qty per side).

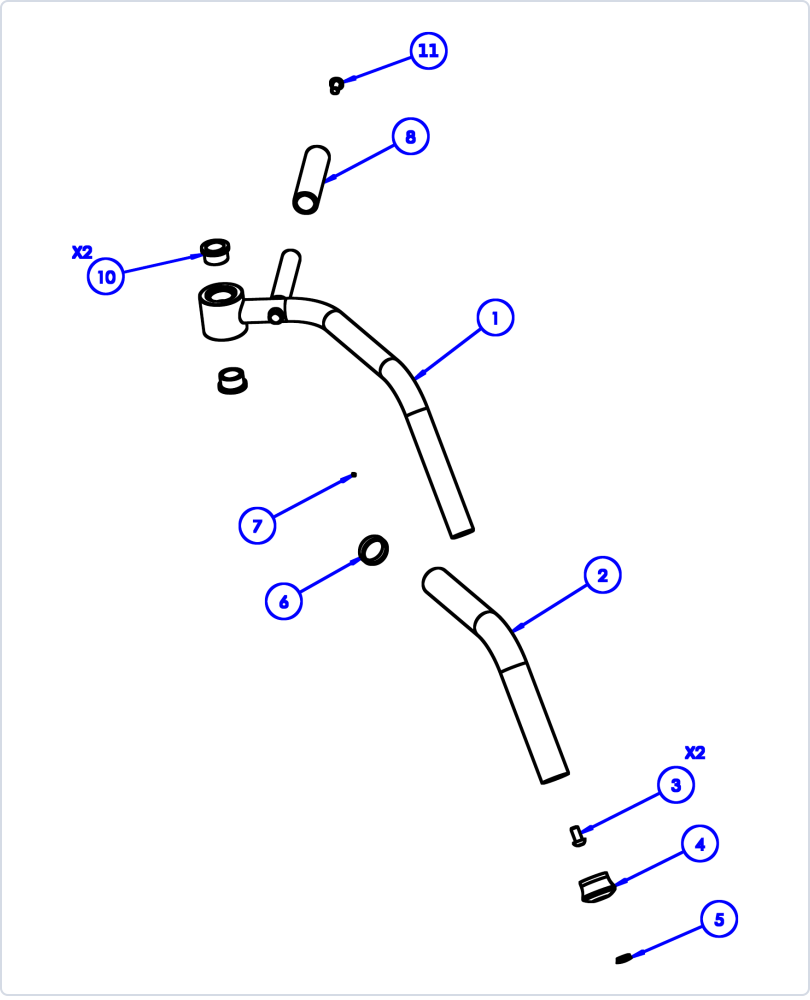

No.	Part No.	Description	Spec	Qty
1	ZL-11-018	Handle frame, L		1
1		Handle frame, R		1
2		Handle tube		1
3	M013080	Button head socket screw	M10×20	2
4	M012096	Handle end cap	Φ48×Φ39×Φ28.8×33	1
5	M012108	Decorative cap, yellow	Φ21.5×Φ18.5×6.3	1
6	M012103	Aluminum ring	Φ39×Φ32.5×10	1
7	M013081	Set screw	M4×3	1
8	M013234	Limit sleeve	Φ33×Φ25.5×132	1
10	M012167	Flange bushing	Φ38×Φ25×20	2
11		End cap		1
-	M013235	Handle grip	Φ32×390	1

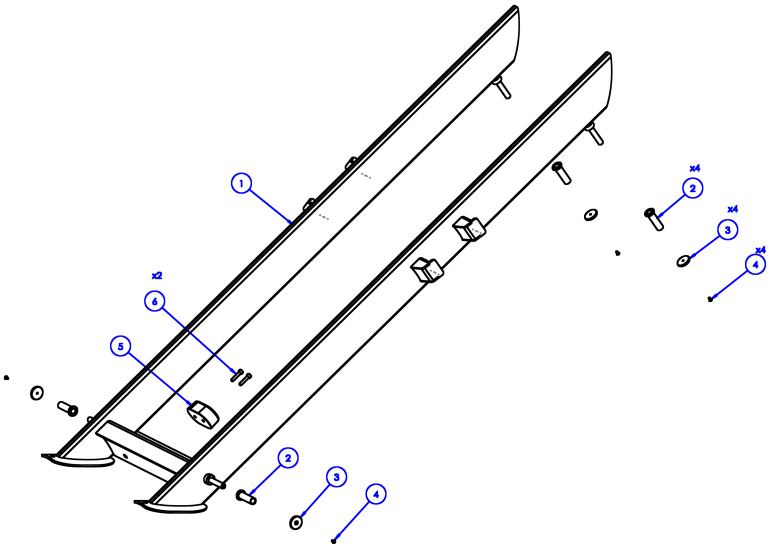

No.	Part No.	Description	Spec	Qty
1		Back pad frame		1
2	M013163	Rotating sleeve	Φ30×Φ20×Φ15.2×69.5	4
3	ZL-07-128	End plate	Φ40×5	4
4	M013165	Socket countersunk head screw	M5×10	4
5	M012825	Bumper pad	109.9×64.9×37	2
6	M012945	Socket head cap screw	M8×35	4

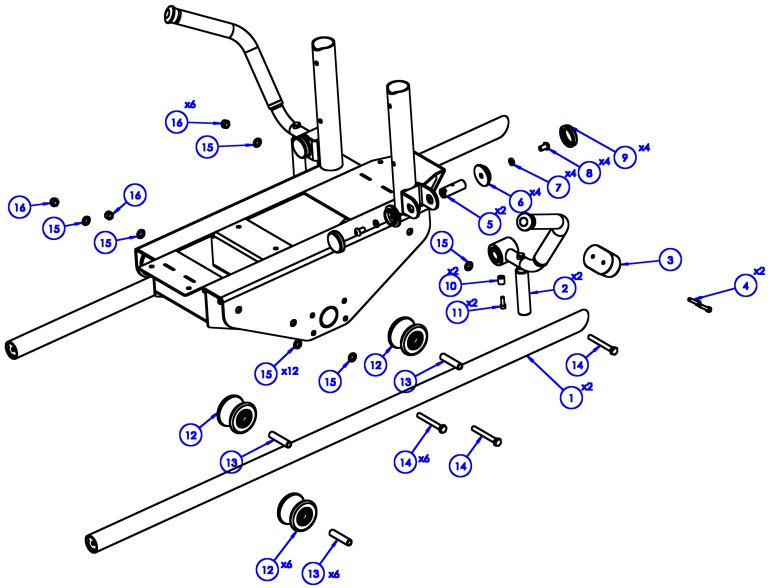

No.	Part No.	Description	Spec	Qty
1		Guide rail		2
2		Handle	See Handle page	2
3		Spacer	Φ30×30	2
4	M013148	Socket head cap screw	M8×25	2
5	ZL-11-080	Pivot shaft	Φ25×71.5	2
6	M013110	Bearing retainer	Φ60×Φ35×15×M45	4
7	M012943	Spring lock washer	M12	4
8	M012768	Button head socket screw	M12×20	4
9	M013109	Pivot end cap	Φ60×17×M45	4
10	ZL-01-166	Spacer	Φ17×Φ14×10	2
11	M013148	Socket head cap screw	M8×25	2
12	M013236	Roller (with 6203-2Z ×2, bushing)	Φ88×Φ49.7×64	6
13	M013239	Sleeve	Φ17×Φ12.5×76	6
14	M013226	Hex bolt	M12×100	6
15	M012944	Flat washer	M12	12
16	M013082	Nylon lock nut	M12	6

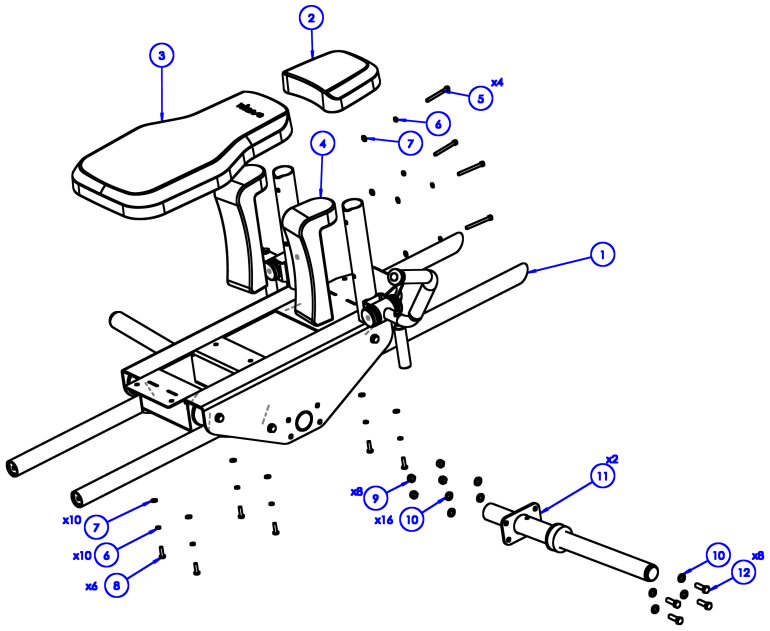

No.	Part No.	Description	Spec	Qty
1		Guide rail		2
2	020180060281	Head pad ● Black	218.5×249.9×231×67	1
2	020180060281	Head pad ● Brown	218.5×249.9×231×67	1
3	M013085	Back pad ● Black	266×400×379.1×667.7×75.9	1
3	M012765	Back pad ● Brown	266×400×379.1×667.7×75.9	1
4	020180120212	Shoulder pad ● Black	100×(70+350+150+50)	2
4	020180120212	Shoulder pad ● Brown	100×(70+350+150+50)	2
5	M013241	Socket head cap screw	M8×80	4
6	M012938	Spring lock washer	M8	10
7	M012937	Flat washer	M8	10
8	M012935	Phillips truss head screw	M8×30	6
9	M013082	Nylon lock nut	M12	8
10	M012944	Flat washer	M12	16
11		Weight horn		2
12	M012942	Hex bolt	M12×30	8

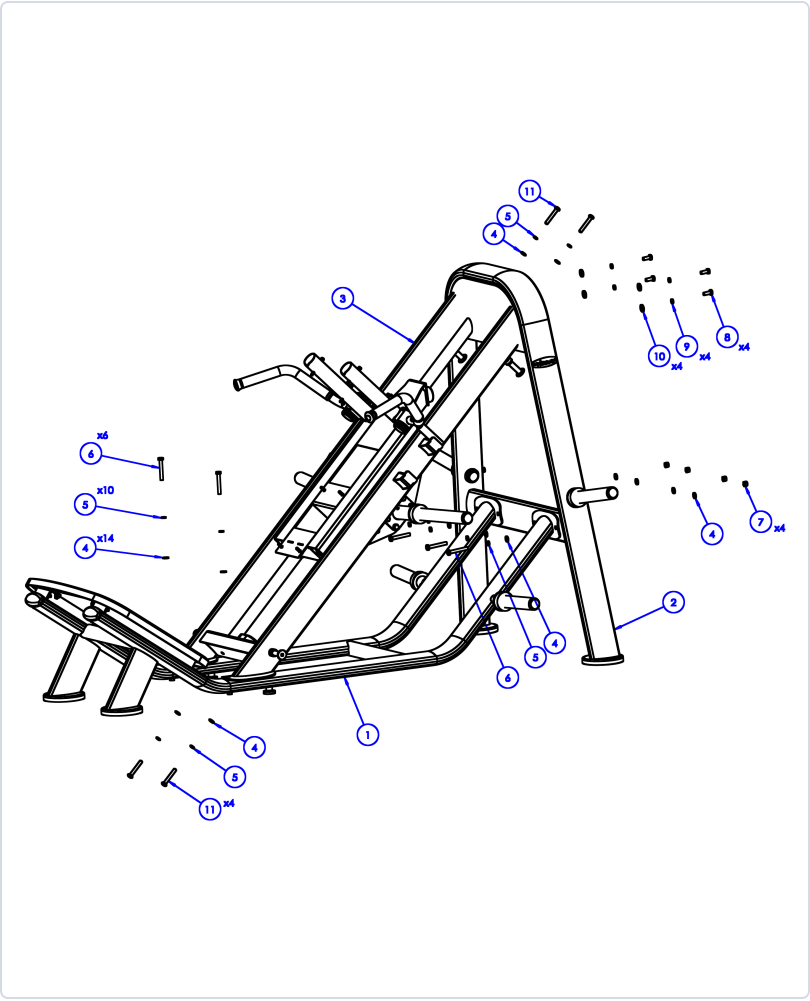

No.	Part No.	Description	Spec	Qty
1		Base frame	See Base Frame page	1
2		Support frame	See Support Frame page	1
3		Back pad frame	See Back Pad Frame page	1
4	M012944	Flat washer	M12	14
5	M012943	Spring lock washer	M12	10
6	M013233	Hex bolt	M12×85	6
7	M013082	Nylon lock nut	M12	4
8	M013117	Hex bolt	M10×20	4
9	M013116	Spring lock washer	M10	4
10	M013115	Flat washer	M10	4
11	M013206	Hex bolt	M12×75	4

Not shown in drawings

No.	Part No.	Description	Spec	Qty
-	M013232	Support bracket		2
-	M013237	Roller bushing	Φ50×Φ38×64	6
-	M012177	Ball bearing (roller)	6203-2Z	12
-	M012942	Hex bolt	M12×30	4
-	M012948	Star nut (for end cap Φ49.5)	M8×Φ46	6
-	ZL-10-027	Weight horn tube	L491	1
-	O008767	Logo decal, small	40.6×90.9×7.8×0.5	2
-	O008778	Exercise instruction decal	230×65	1
-	020130030283	Warning decal	46×108	1
-	020130030284	Pinch point warning decal	50.8×73.2	4
-	020130040216	Maintenance decal	45×85	1