

ZL-12 Ver.1

SERVICE PARTS LIST

Upholstery color / Part No.

Upholstery	Black	Brown
Seat pad	020180010564	020180010564
Back pad	M013085	M012765
Head pad	020180060281	020180060281

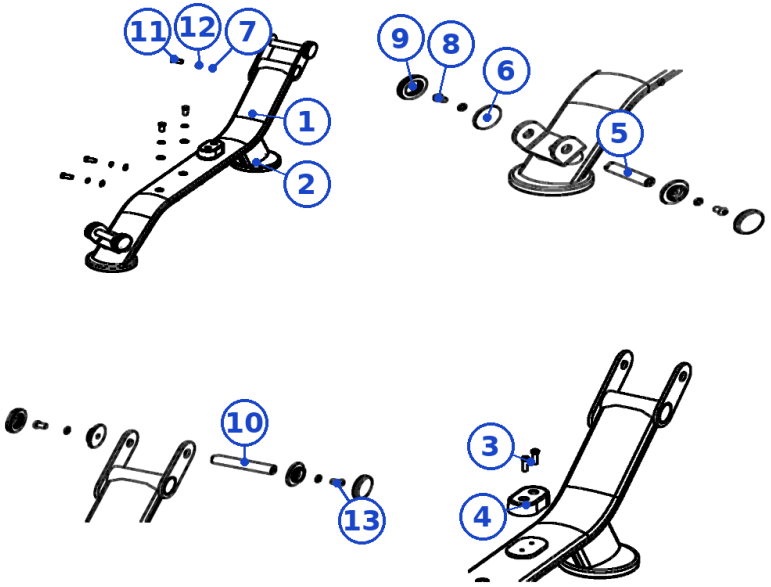

No.	Part No.	Description	Spec	Qty
1	ZL-12-010	Base frame, L		1
1	ZL-12-013	Base frame, R		1
2	M012064	Leveling foot	Φ170×M16×23.5	4
3	M012945	Socket head cap screw	M8×35	4
4	M012825	Bumper pad	109.9×64.9×37	2
5	M013111	Pivot shaft	Φ25×122	2
6	M012767	Bearing retainer	Φ72×Φ35×15×M45	8
7	M012943	Spring lock washer	M12	18
8	M012768	Button head socket screw	M12×20	6
9	M012769	Pivot end cap	Φ72×17×M45	8
10	M012864	Pivot shaft	Φ25×146	2
11	M012942	Hex bolt	M12×30	10
12	M012944	Flat washer	M12	10
13	M013242	Button head socket screw	M12×30	2

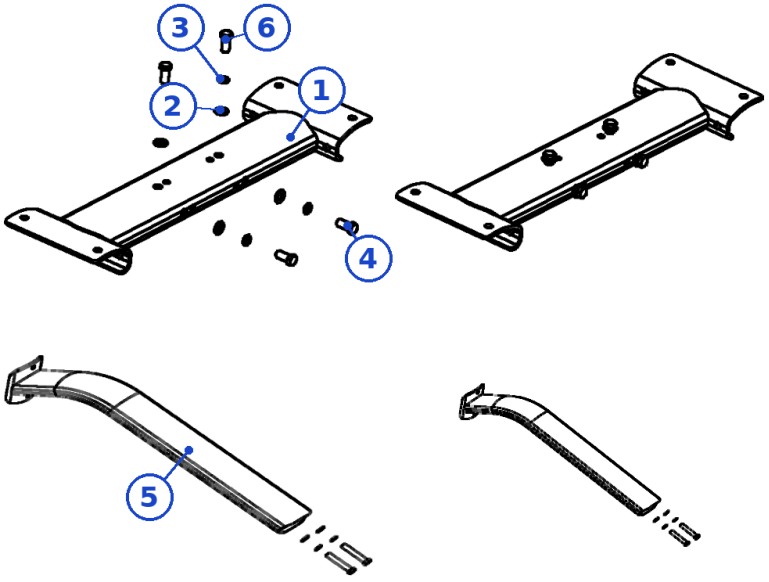

No.	Part No.	Description	Spec	Qty
1	ZL-12-024	Connecting frame, front		1
2	M012944	Flat washer	M12	6
3	M012943	Spring lock washer	M12	6
4	M012942	Hex bolt	M12×30	4
5	ZL-12-028	Connecting frame, rear		1
6	M013206	Hex bolt	M12×75	2

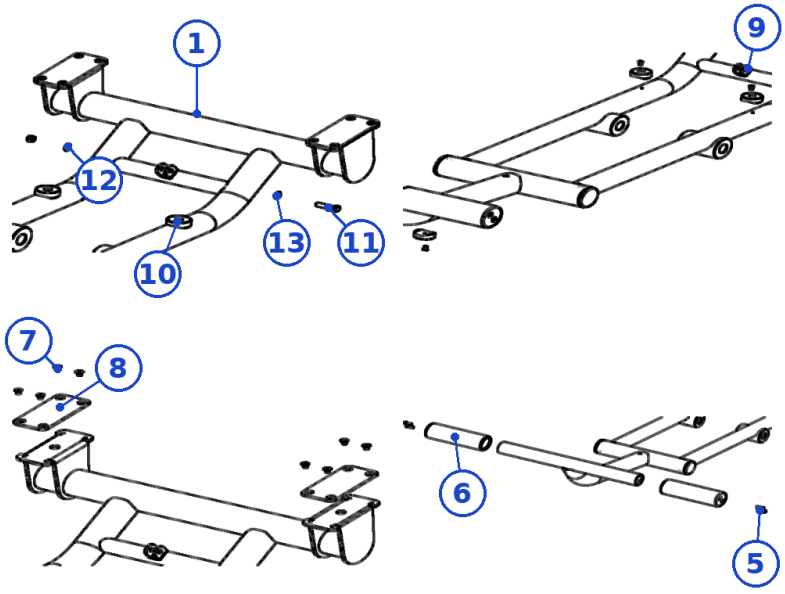

No.	Part No.	Description	Spec	Qty
1	ZL-12-016	Foot lever frame		1
2	M013076	Star nut (for end cap Φ60)	M8×Φ56	2
3	M012947	Set screw	M8×30	2
4	M013077	End cap	Φ60×Φ54×17×M8	2
5	M013125	Socket head cap screw	M6×20	4
6	M013124	Foot pad	Φ65×Φ51×200	2
7	M013126	Socket countersunk head screw	M6×10	8
8	M013127	Anti-scratch plate	60×130×4	2
9	M013129	Button head socket screw	M5×10	2
10	M013128	Bumper	Φ13×Φ38×15	3
11	M013131	Hex bolt	M8×35	1
12	M012937	Flat washer	M8	2
13	M013132	Nylon lock nut	M8	1
14	M012834	Button head socket screw	M6×12	1

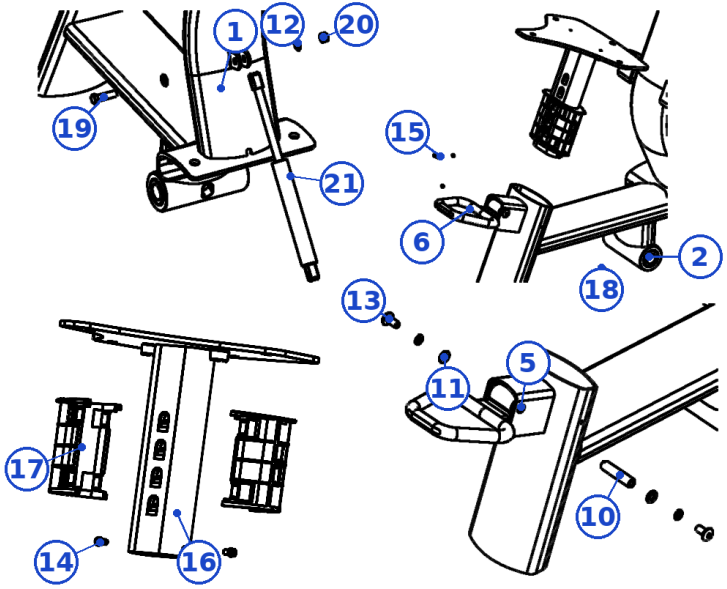

No.	Part No.	Description	Spec	Qty
1	ZL-12-004	Main frame		1
2	M012167	Flange bushing	Φ38×Φ25×20	2
3	M012822	Tube end plug	58×130×3 tube	1
4	M012933	Phillips pan head tapping screw	M4×15	4
5	M012095	Flange bushing	Φ24×Φ12×12	2
6	S010796	Seat adjustment handle		1
7	M012829	Pop-pin plunger	Φ15.9×Φ12.5×Φ9.9×63.5	1
8	M012173	Pop-pin spring	Φ1.2×Φ10.5×38	1
9	M012092	Pop-pin nut	Φ25.4×M20×1.5×16	1
10	ZL-02-122	Handle pivot shaft	Φ12×57	1
11	M012937	Flat washer	M8	4
12	M012938	Spring lock washer	M8	2
13	M012939	Phillips truss head screw	M8×20	2
14	M012940	Socket head cap screw	M5×10	4
15	M012839	Bumper	Φ20×Φ17.9×12	2
16	ZL-13-015	Seat frame	L265	1
17	M012827	Seat slide sleeve	58×130×3 tube	2
18	M012941	Set screw	M4×6	2
19	M013131	Hex bolt	M8×35	1
20	M013132	Nylon lock nut	M8	1
21	M013130	Gas spring	QDH22×10-310×115-15KG	1
22	M012944	Flat washer	M12	2
23	M012943	Spring lock washer	M12	2
24	M012942	Hex bolt	M12×30	2

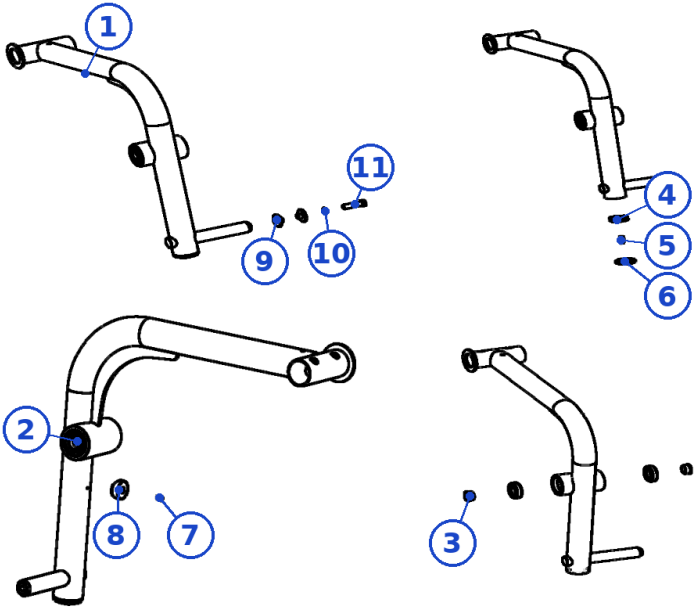

No.	Part No.	Description	Spec	Qty
1	ZL-12-019	Rotating frame, L		1
1	ZL-12-013	Rotating frame, R		1
2	M012840	Ball bearing	6006-2Z	4
3	ZL-02-110	Flange bushing	Φ36×Φ30×Φ25×16	4
4	M013076	Star nut (for end cap Φ60)	M8×Φ56	2
5	M012947	Set screw	M8×30	2
6	M013077	End cap	Φ60×Φ54×17×M8	2
7	M013129	Button head socket screw	M5×10	2
8	M013128	Bumper	Φ13×Φ38×15	2
9	ZL-12-105	Washer plate	Φ40×Φ16	4
10	M013244	Spring lock washer	M16	2
11	M013245	Hex bolt	M16×60	2

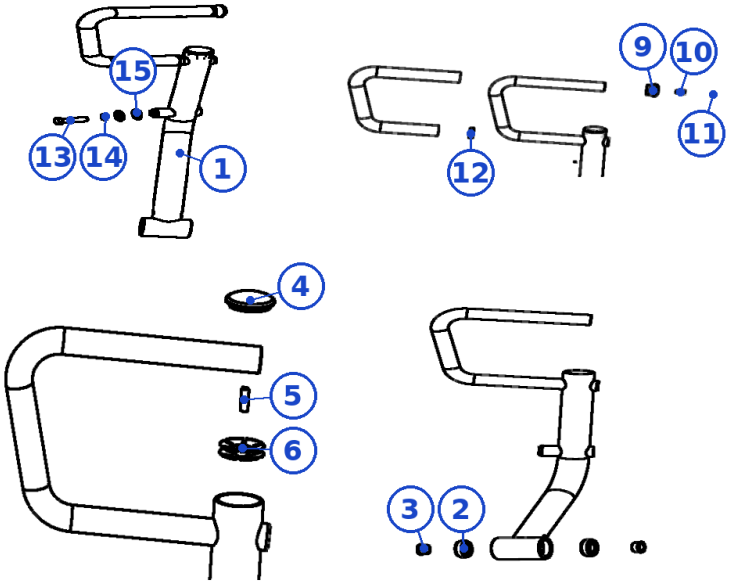

No.	Part No.	Description	Spec	Qty
1	ZL-12-034	Press arm, L		1
1	ZL-12-037	Press arm, R		1
2	M012840	Ball bearing	6006-2Z	4
3	ZL-02-110	Flange bushing	Φ36×Φ30×Φ25×16	4
4	M013077	End cap	Φ60×Φ54×17×M8	2
5	M012947	Set screw	M8×30	4
6	M013076	Star nut (for end cap Φ60)	M8×Φ56	2
7	M012103	Aluminum ring	Φ39×Φ32.5×10	2
8	020170060236	Handle foam grip	Φ32×687	2
9	M012096	Handle end cap	Φ48×Φ39×Φ28.8×33	2
10	M013080	Button head socket screw	M10×20	2
11	M012105	Decorative cap	Φ21.5×Φ18.5×6.3	2
12	M013081	Set screw	M4×3	2
13	M013245	Hex bolt	M16×60	2
14	M013244	Spring lock washer	M16	2
15	ZL-12-105	Washer plate	Φ40×Φ16	4

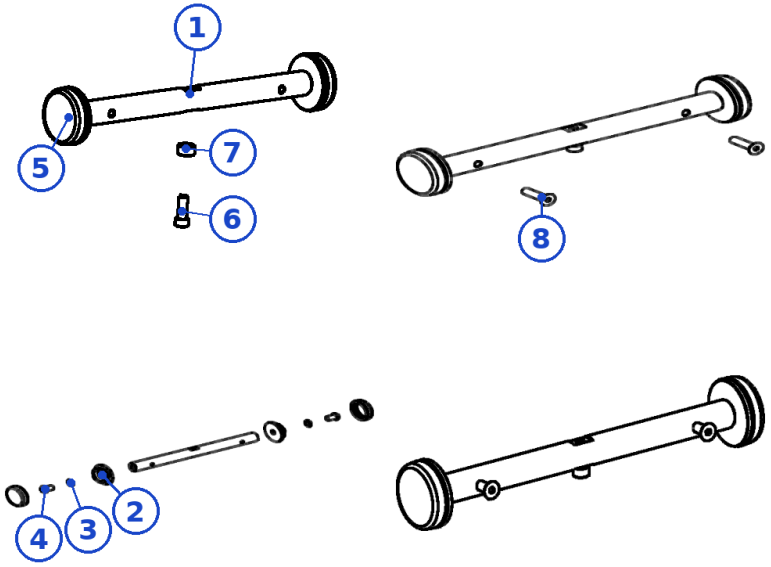

No.	Part No.	Description	Spec	Qty
1	ZL-12-060	Pivot shaft	Φ25×317	1
2	M013110	Bearing retainer	Φ60×Φ35×15×M45	2
3	M012943	Spring lock washer	M12	4
4	M012768	Button head socket screw	M12×20	2
5	M013109	Pivot end cap	Φ60×17×M45	2
6	M013148	Socket head cap screw	M8×25	1
7	ZL-01-166	Spacer	Φ17×10	2
8	M013152	Socket countersunk head screw	M8×35	2

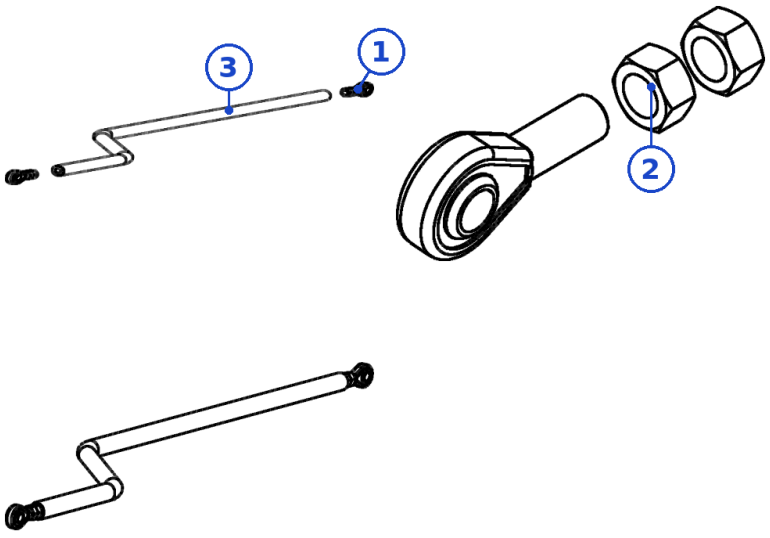

No.	Part No.	Description	Spec	Qty
1	M013249	Rod end bearing	M16 (male, RH)	4
2	M013248	Hex nut	M16×13	8
3	ZL-12-038	Linkage rod	L1367.8	2

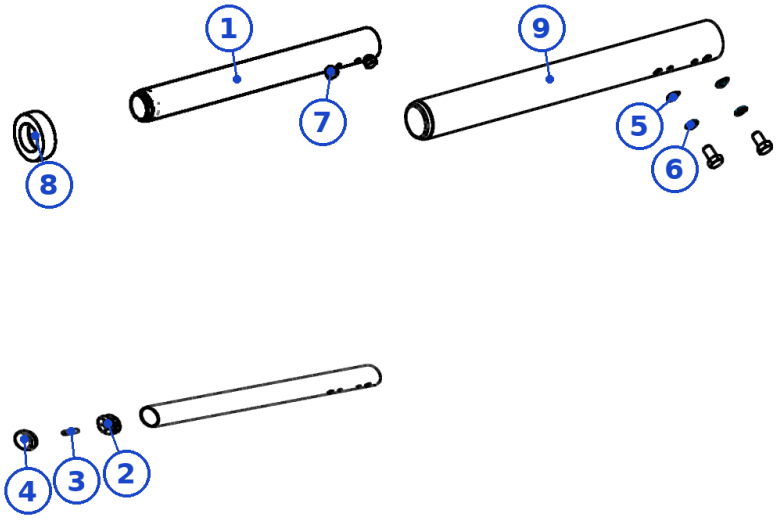

No.	Part No.	Description	Spec	Qty
1	ZL-04-035	Weight horn tube	L473	2
2	M012948	Star nut (for end cap Φ49.5)	M8×Φ46	4
3	M012947	Set screw	M8×30	4
4	M012946	Weight horn end cap	Φ49.5×Φ44×17×M8	4
5	M013118	Saddle washer	M10	8
6	M013116	Spring lock washer	M10	8
7	M013117	Hex bolt	M10×20	10
8	M012100	Rubber bumper ring	Φ78×Φ48×25	4
9	ZL-12-108	Weight horn tube		2
10	M012168	Roller	Φ60×Φ40×Φ32.5×50	2
11	M012177	Ball bearing	6203-2Z	4
12	M013115	Flat washer	M10	2

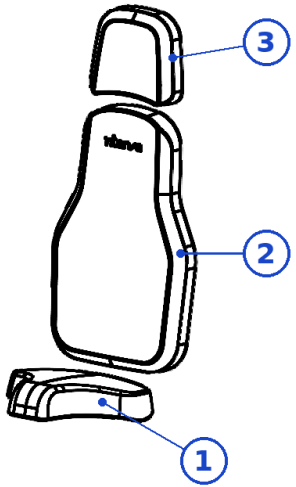

No.	Part No.	Description	Spec	Qty
1	020180010564	Seat pad ● Black	112.5×379.4×374.5×93.9	1
1	020180010564	Seat pad ● Brown	112.5×379.4×374.5×93.9	1
2	M013085	Back pad ● Black	266×400×379.1×667.7×75.9	1
2	M012765	Back pad ● Brown	266×400×379.1×667.7×75.9	1
3	020180060281	Head pad ● Black	218.5×249.9×231×67	1
3	020180060281	Head pad ● Brown	218.5×249.9×231×67	1
4	M012935	Phillips truss head screw	M8×30	10
5	M012938	Spring lock washer	M8	10
6	M012937	Flat washer	M8	10

No.	Part No.	Description	Spec	Qty
-	M012064	Leveling foot	Φ170×M16×23.5	1
-	M013102	Cover cap	46×41×62.6×6	6
-	O008767	Logo decal, small	40.6×90.9×7.8×0.5	1
-	O008779	Exercise instruction decal	90×200	1
-	020130030283	Warning decal	46×108	2
-	020130030284	Pinch point warning decal	50.8×73.2	6